# N Female to N Female Bulkhead Adapter

**A1825B-Y1** Rev 1

## Drawing(mm)

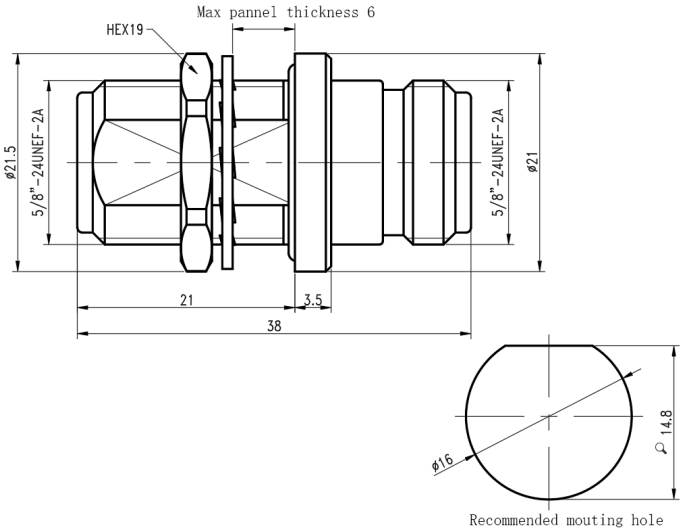

## Electrical & Environmental

| | |
|---|---|
| **Impedance** | 50 ohm |
| **Frequency Range** | 18 GHz |
| **VSWR** | 1.2 max |
| **Operating Temp** | -55℃ to +165℃ |
| **Interface** | N per MIL-STD-348 |

## Material

| | |
|---|---|
| **Connector Body** | Passivated stainless steel |
| **Center Contact** | Gold plated beryllium copper |
| **Insulator** | PEI |
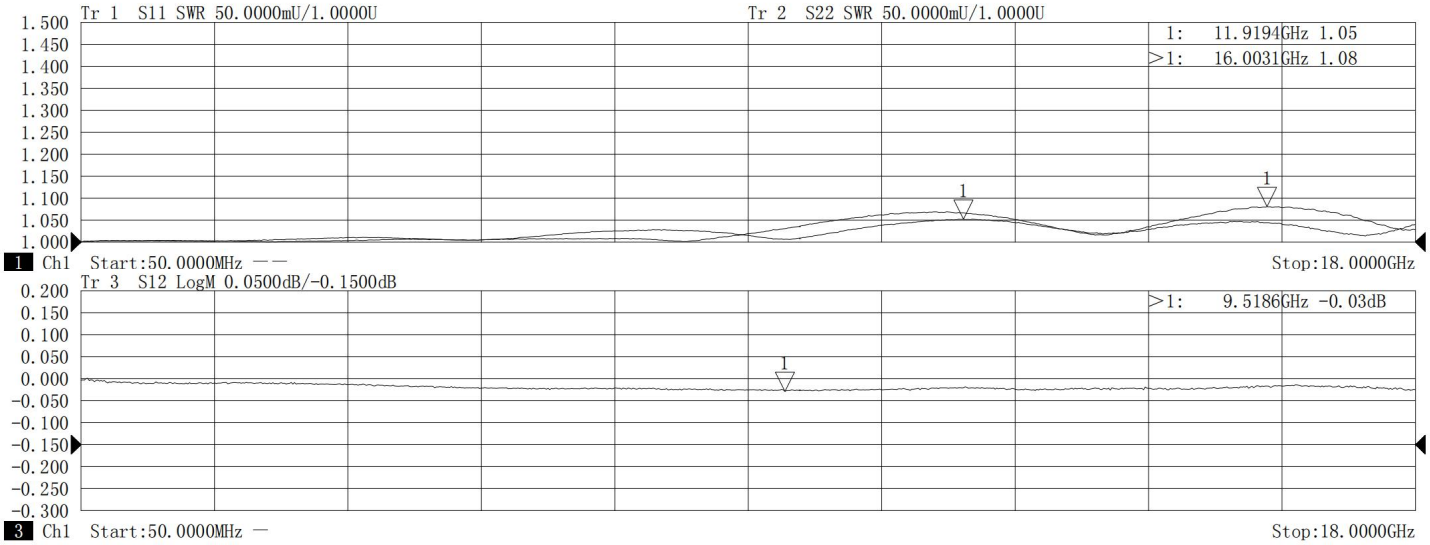
## Typical Test Data