PRODUCT DATA SHEET

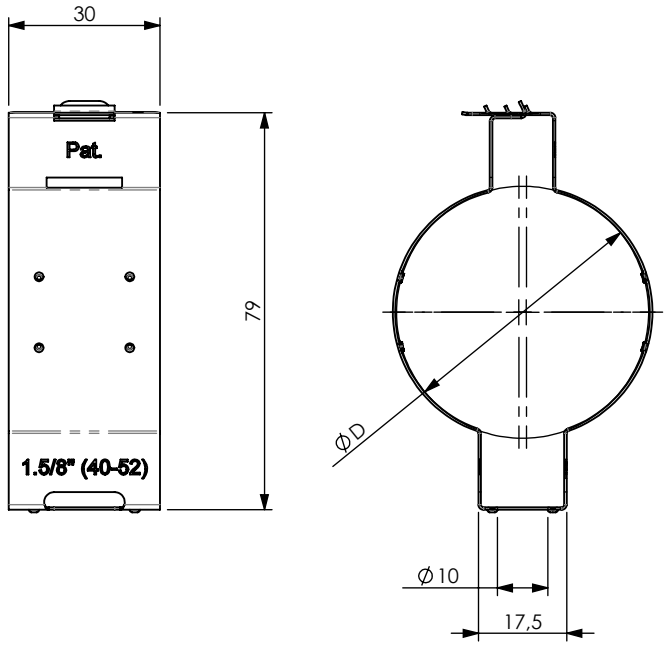

A) SPECIFICATIONS

Click Collars for Cables and Pipes.
Ratchet-tightening and opening by hand without tool.
Monoblock body made of flexible Stainless Steel.

B) DELIVERY MODALITIES

Packing in boxes. Label indicating: product code, article, quantity, production batch, FIMO logo and figure. (Customer code on request).

C) MOUNTING INSTRUCTIONS

On request

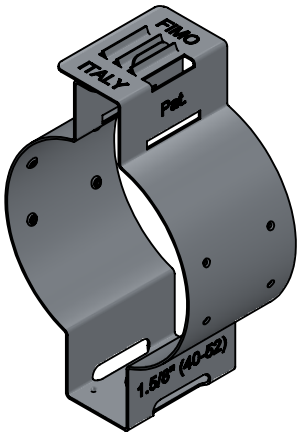

code	6120100050
article	SCC 50

D		
40-52	100	0.0263kg

RI	DATE	DR	DATE	AP
02				
01				
00	26/01/2015	E.B.	26/01/2015	A.V.
	1ST EMISSION			

Description:

SCC 50 = click collar for cable 1.5/8"

FIMO Setting Installation Standards

RoHS compliant. RoHS 2002/95/EC

Use: Security system for radiating cables on steel ropes

FI.MO.TEC. S.p.a. reserves the right to modify the technical specifications without prior notice, according to the technical progress
Copyright FI.MO.TEC. S.p.a. All rights reserved.