# PRODUCT DATA SHEET

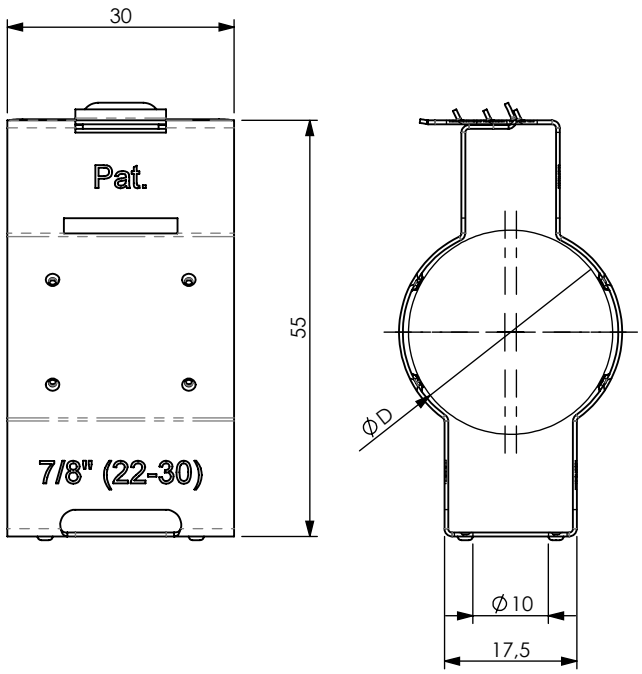


***A) SPECIFICATIONS***

*Click Collars for Cables and Pipes.*
*Ratchet-tightening and opening by hand without tool.*
*Monoblock body made of flexible Stainless Steel.*

***B) DELIVERY MODALITIES***

*Packing in boxes. Label indicating: product code, article, quantity, production batch, FIMO logo and figure. ( Customer code on request ).*

***C) MOUNTING INSTRUCTIONS***

***On request***

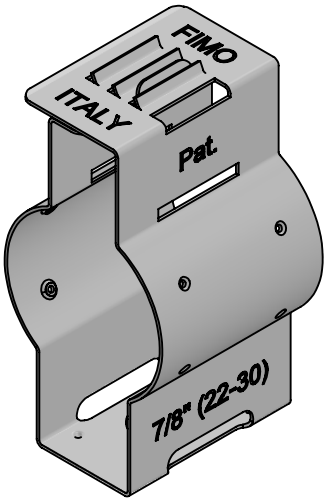


| code | 6120100030 |
|---|---|
| article | SCC 30 |

| D | | |
|---|---|---|
| 22-30 | 100 | 0.0025kg |

| RI | DATE | DR | DATE | AP |
|---|---|---|---|---|
| 02 | | | | |
| 01 | | | | |
| 00 | 26/01/2015 | E.B. | 26/01/2015 | A.V. |
| | 1ST EMISSION | | | |

*Description:*

**SCC 30 = click collar for cable 7/8"**

FIMO Setting Installation Standards

RoHS compliant. RoHS 2002/95/EC

*Use: Security system for radiating cables on steel ropes*

FI.MO.TEC. S.p.a. reserves the right to modify the technical specifications without prior notice, according to the technical progress
Copyright FI.MO.TEC. S.p.a. All rights reserved.