RF ONE

RF Components Catalog

2022

About Us

RF ONE is an **ISO 9001** certified supplier of high quality RF, Microwave and mmWave components from China. Since 2002 we have been dedicated to the design and manufacturing of RF attenuators, terminations and other passive components. As the industry evolved, RF ONE has grown and expanded our lines to keep meeting customer needs. Our products are used widely in commercial, industrial, and military applications including wireless, satellite, defense, test&measurement and many more.

RF ONE has been continuously pursuing improvement and dedicating to product innovation, granted with 13 patents in the range of RF Attenuators, mmWave terminations, low PIM Passive Components etc.

We have established long term solid partnership with worldwide sales representatives and distributors. RF ONE is the approved vendor to **Indra, Viavi Solutions, Teledyne Paradise Datacom** and also is qualified supplier to **ACE Technologies Corp, JCET, Ericsson** and more.

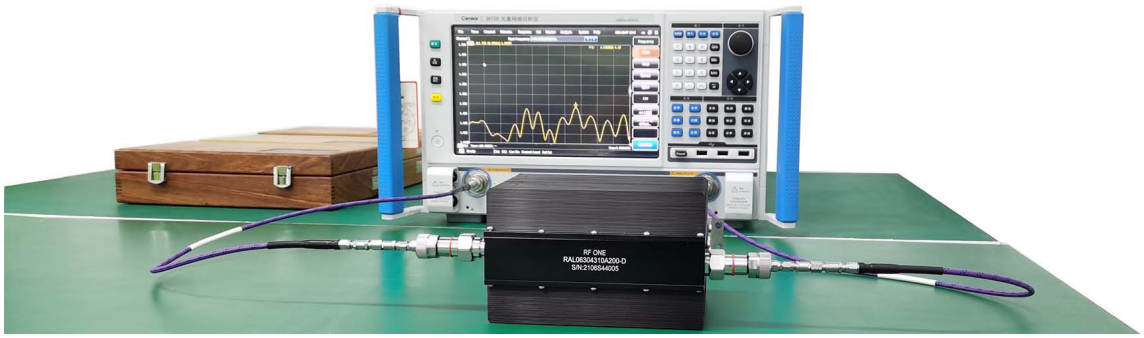

Main categories include:

- Coaxial Fixed Attenuator/Termination (DC-4GHz through 67GHz, 2W-2kW)
- DC Block (9kHz up to 67GHz)
- mmWave Coax Adapter/Connector(Up to 110GHz)
- Low PIM Component (170dBc termination/attenuator/cable/adapter)
- Waveguide Product (adapter/attenuator/termination/coupler)
- Power Divider
- Flexible Cable Assembly (Up to 110GHz)

ISO 9001 Certificate

Part of Patent Certificates

Contents

Coaxial Fixed Attenuators (Page 1-15)
mmWave(1.85mm, 2.4mm, 2.92mm, 27GHz SMA)....2
2W to 25W ≤ 18GHz....3
30W to 100W ≤ 18GHz....6
150W to 2000W ≤ 18GHz....11
Conduction Cooled Attenuators....13
Low PIM Attenuators....14

Coaxial Terminations (Page 16-30)
mmWave(1.85mm, 2.4mm, 2.92mm, 3.5mm, 27GHz SMA, SMP, SSMP, SSMA)....17
1W to 25W ≤ 18GHz....19
30W to 100W ≤ 18GHz....24
150W to 500W ≤ 18GHz....27
Low PIM Terminations....29

DC Blocks (Page 31-34)
Inner DC Blocks....31

Coax Adapters (Page 35-50)
1.0mm Series, DC-110GHz....36
1.85mm Series, DC-67GHz....36
2.4mm Series, DC-50GHz....37
SSMP Series, DC-40GHz....38
2.92mm Series, DC-40GHz....38
SMP Series, DC-40GHz....39
SSMA Series, DC-40GHz....40
3.5mm Series, DC-34GHz....42
SMA Series, DC-27GHz....44
SMA Series, DC-18GHz....45
N Series, DC-18GHz....47
TNCA Series, DC-18GHz....49

Waveguide Components (Page 51-55)
Waveguide To Coax Adapters....51
Waveguide Terminations....54

Power Dividers (Page 56-63)
Wilkinson Power Dividers....56
Resistive Power Dividers....63

RF Connectors (Page 64-67)
End Launch Connectors....64

RF Tools (Page 68-69)
RF Torque Wrenches....68

Coaxial Fixed Attenuators

Fixed attenuators from RF ONE are available in SMA, N type, BNC, DIN 7/16, 4.3-10, QMA, 2.92mm, 2.4mm,1.85mm connectors, operating from DC-4GHz and up to 67GHz. As the market demands continue to push for higher frequency, we are also investing to develop 1.0 mm 110 GHz attenuators and terminations.

Features and Advantages

- Wide choices of connectors and frequency ranges
- RoHS & REACH compliant
- No MOQ, in stock or 1 week delivery
- Low PIM versions available
- Customized designs in outlines and optimized VSWR available

Attenuator Matrix

	1.85mm	2.4mm	2.92mm	SMA	N Type	TNC	4.3-10	DIN 7/16	BNC	QMA
2W	67GHz	50GHz	40GHz	27GHz	18GHz	18GHz	6GHz		6GHz	6GHz
5W	67GHz	50GHz	40GHz	18GHz	18GHz	18GHz	6GHz		6GHz	
10W	67GHz	50GHz	40GHz	18GHz	18GHz	18GHz	6GHz	6GHz	6GHz	
15W		50GHz	40GHz	18GHz	18GHz	18GHz	6GHz	6GHz	6GHz	
20W		50GHz	40GHz	18GHz	18GHz	18GHz	6GHz	6GHz	6GHz	
25W		50GHz	40GHz	18GHz	18GHz	18GHz	6GHz	6GHz	6GHz	
30W		50GHz	40GHz	18GHz	18GHz	18GHz	6GHz	6GHz	6GHz	
50W			40GHz	18GHz	18GHz	18GHz	6GHz	6GHz	6GHz	
100W			30GHz	18GHz	18GHz	18GHz	6GHz	6GHz	6GHz	
150W				18GHz	18GHz			6GHz		
200W					18GHz			6GHz		
250W					18GHz			6GHz		
300W					18GHz			6GHz		
500W					18GHz			6GHz		
>500W					3GHz			3GHz		

1. The frequency in the matrix only represents the highest frequency available.
2. This matrix does not include all of our attenuator lineup, for needs of other Freq vs. Power vs. Connectors, please contact us at sales@rfone.cn.

Model Number Description

RFH(B)	XX	XX	XX	X	XX	XX
Series Code	**Frequency**	**dB Value**	**Connector**	**Input/Output**	**Avg Power**	**Additional**
RFH=Unidirectional RFHB=Bidirectional	04=DC-4G 18=DC-18G 40=DC-40G	06=6dB 30=30dB	S=SMA N= N Type B=BNC 4310=4.3-10	A=F for both ends B=M for both ends C= F for IN and M for OUT D= M for IN and F for OUT	5=5W 100=100W	Default is round D=Rectangular S=Square and more...

1. e.g. RFH0630NA100 refers to Unidirection, DC-6GHz, 30dB, N female for two ports, 100 Watts, round attenuator.
2. The dimensions in the following attenuator tables refer to heat sink size if heat sink exists.

mmWave(1.85mm, 2.4mm, 2.92mm, 27GHz SMA)

1.85mm, DC-67GHz

Part Number	Avg Power (W)	Freq Range (GHz)	Connector	VSWR Max	Attenuations (dB)	Direction	Dimensions (mm)
RFHB67XX185C2	2	DC-67	1.85mm	1.3	1-40	Bidirectional	16(L)*9(φ)
RFHB67XX185C5	5	DC-67	1.85mm	1.45	1-40	Bidirectional	15.6(L)*28(φ)
RFH67XX185D10	10	DC-67	1.85mm	1.45	13-40	Unidirectional	22.2(L)*34.8(φ)

2.4mm, DC-50GHz

Part Number	Avg Power (W)	Freq Range (GHz)	Connector	VSWR Max	Attenuations (dB)	Direction	Dimensions (mm)
RFHB50XX24C2	2	DC-50	2.4mm	1.3	1-40	Bidirectional	16(L)*9(φ)
RFHB50XX24C5	5	DC-50	2.4mm	1.34	1-40	Bidirectional	15.6(L)*28(φ)
RFHB50XX24C8	8	DC-50	2.4mm	1.34	1-40	Bidirectional	15.6(L)*34.8(φ)
RFH50XX24D10	10	DC-50	2.4mm	1.34	3-40	Unidirectional	22.2(L)*28(φ)
RFH50XX24D15	15	DC-50	2.4mm	1.34	3-40	Unidirectional	22.2(L)*34.8(φ)
RFH50XX24D20	20	DC-50	2.4mm	1.38	10-40	Unidirectional	28.8(L)*40.8(φ)
RFH50XX24D30	30	DC-50	2.4mm	1.38	10-40	Unidirectional	47.6(L)*40.8(φ)
RFH50XX24D35	35	DC-50	2.4mm	1.44	10-40	Unidirectional	54.2(L)*40.8(φ)

2.92mm, DC-40GHz

Part Number	Avg Power (W)	Freq Range (GHz)	Connector	VSWR Max	Attenuations (dB)	Direction	Dimensions (mm)
RFHB40XX292C2	2	DC-40	2.92mm	1.23	1-30	Bidirectional	15.2(L)*9(φ)
RFHB40XX292C5	5	DC-40	2.92mm	1.26	1-40	Bidirectional	14.4(L)*28(φ)
RFHB40XX292C10	10	DC-40	2.92mm	1.26	1-40	Bidirectional	14.4(L)*34.8(φ)
RFH40XX292D15	15	DC-40	2.92mm	1.26	3-40	Unidirectional	21.4(L)*34.8(φ)
RFH40XX292D20	20	DC-40	2.92mm	1.26	3-40	Unidirectional	21.4(L)*40.8(φ)
RFH40XX292D25	25	DC-40	2.92mm	1.3	10-40	Unidirectional	28.4(L)*40.8(φ)
RFH40XX292D30	30	DC-40	2.92mm	1.3	10-40	Unidirectional	46.1(L)*34.8(φ)
RFH40XX292D35	35	DC-40	2.92mm	1.3	10-40	Unidirectional	46.1(L)*40.8(φ)
RFH40XX292D40	40	DC-40	2.92mm	1.38	10-40	Unidirectional	53.1(L)*40.8(φ)
RFH40XX292D45	45	DC-40	2.92mm	1.38	10-40	Unidirectional	60.1(L)*40.8(φ)
RFH40XX292D50	50	DC-40	2.92mm	1.38	10-40	Unidirectional	60.1(L)*49.8(φ)
RFH30XX292D100	100	DC-30	2.92mm	1.3	10-40	Unidirectional	99(L)*49.8(φ)

SMA, DC-27GHz

Part Number	Avg Power (W)	Freq Range (GHz)	Connector	VSWR Max	Attenuations (dB)	Direction	Dimensions (mm)
RFHB27XXSC2	2	DC-27	SMA	1.3	1-30	Bidirectional	16.3(L)*9(φ)

2W to 25W ≤ 18GHz

2 Watt, N, SMA, BNC, 4.3-10, QMA, Up to 18GHz

Part Number	Avg Power (W)	Freq Range (GHz)	Connector	VSWR Max	Attenuations (dB)	Direction	Dimensions (mm)	
RFHB04XXNC2	2	DC-4	N	1.15	1-60	Bidirectional	45(L)*19(φ)	
RFHB06XXNC2	2	DC-6	N	1.25	1-60	Bidirectional	45(L)*19(φ)	
RFHB08XXNC2	2	DC-8.5	N	1.25	1-60	Bidirectional	45(L)*19(φ)	
RFHB12XXNC2	2	DC-12.4	N	1.3	1-60	Bidirectional	45(L)*19(φ)	
RFHB18XXNC2	2	DC-18	N	1.4	1-60	Bidirectional	45(L)*19(φ)	
RFHB04XXSC2	2	DC-4	SMA	1.20	1-60	Bidirectional	24(L)*9(φ)	
RFHB06XXSC2	2	DC-6	SMA	1.25	1-60	Bidirectional	24(L)*9(φ)	
RFHB08XXSC2	2	DC-8.5	SMA	1.25	1-60	Bidirectional	24(L)*9(φ)	
RFHB12XXSC2	2	DC-12.4	SMA	1.25	1-60	Bidirectional	24(L)*9(φ)	
RFHB18XXSC2	2	DC-18	SMA	1.3	1-60	Bidirectional	24(L)*9(φ)	
RFHB27XXSC2	2	DC-27	SMA	1.3	1-30	Bidirectional	16.3(L)*9(φ)	
RFHB04XXBC2	2	DC-4	BNC	1.25	1-30	Bidirectional	35(L)*14.5(φ)	
RFHB06XXBC2	2	DC-6	BNC	1.25	1-30	Bidirectional	35(L)*14.5(φ)	
RFHB03XX4310C2	2	DC-3	4.3-10	1.2	1-30	Bidirectional	48(L)*22(φ)	
RFHB06XX4310C2	2	DC-6	4.3-10	1.2	1-30	Bidirectional	48(L)*22(φ)	
RFHB03XXQC2	2	DC-3	QMA	1.2	1-50	Bidirectional	36(L)*10.5(φ)	
RFHB06XXQC2	2	DC-6	QMA	1.2	1-50	Bidirectional	36(L)*10.5(φ)	

5 Watt, N, SMA, BNC, 4.3-10, Up to 18GHz

Part Number	Avg Power (W)	Freq Range (GHz)	Connector	VSWR Max	Attenuations (dB)	Direction	Dimensions (mm)	
RFHB04XXNC5	5	DC-4	N	1.2	1-60	Bidirectional	58(L)*19(φ)	
RFHB06XXNC5	5	DC-6	N	1.2	1-60	Bidirectional	58(L)*19(φ)	
RFHB08XXNC5	5	DC-8.5	N	1.2	1-60	Bidirectional	58(L)*19(φ)	
RFHB12XXNC5	5	DC-12.4	N	1.3	1-60	Bidirectional	58(L)*19(φ)	
RFHB18XXNC5	5	DC-18	N	1.35	1-40	Bidirectional	58(L)*19(φ)	
RFHB04XXSC5	5	DC-4	SMA	1.2	1-50	Bidirectional	9(L)*19(φ)	
RFHB06XXSC5	5	DC-6	SMA	1.25	1-50	Bidirectional	9(L)*19(φ)	
RFHB08XXSC5	5	DC-8.5	SMA	1.25	1-50	Bidirectional	9(L)*19(φ)	
RFHB12XXSC5	5	DC-12.4	SMA	1.25	1-30	Bidirectional	9(L)*19(φ)	
RFHB18XXSC5	5	DC-18	SMA	1.3	1-30	Bidirectional	9(L)*19(φ)	
RFHB04XXBC5	5	DC-4	BNC	1.20	1-30	Bidirectional	8(L)*29(φ)	
RFHB06XXBC5	5	DC-6	BNC	1.25	1-30	Bidirectional	8(L)*29(φ)	
RFHB03XX4310C5	5	DC-3	4.3-10	1.15	1-30	Bidirectional	48(L)*22(φ)	
RFHB06XX4310C5	5	DC-6	4.3-10	1.2	1-30	Bidirectional	48(L)*22(φ)	

10 Watt, N, SMA, DIN 7/16, Up to 18GHz

Part Number	Avg Power (W)	Freq Range (GHz)	Connector	VSWR Max	Attenuations (dB)	Direction	Dimensions (mm)
RFHB04XXNC10	10	DC-4	N	1.2	1-60	Bidirectional	26(L)*30(φ)
RFHB06XXNC10	10	DC-6	N	1.25	1-60	Bidirectional	26(L)*30(φ)
RFHB08XXNC10	10	DC-8.5	N	1.25	1-60	Bidirectional	26(L)*30(φ)
RFHB12XXNC10	10	DC-12.4	N	1.35	1-60	Bidirectional	26(L)*30(φ)
RFHB18XXNC10	10	DC-18	N	1.45	1-60	Bidirectional	26(L)*30(φ)
RFHB04XXSC10	10	DC-4	SMA	1.15	1-40	Bidirectional	28(L)*15.8(φ)
RFHB06XXSC10	10	DC-6	SMA	1.2	1-40	Bidirectional	28(L)*15.8(φ)
RFHB08XXSC10	10	DC-8.5	SMA	1.2	1-40	Bidirectional	28(L)*15.8(φ)
RFHB12XXSC10	10	DC-12.4	SMA	1.25	1-40	Bidirectional	28(L)*15.8(φ)
RFHB18XXSC10	10	DC-18	SMA	1.35	1-40	Bidirectional	28(L)*15.8(φ)
RFHB04XXDC10	10	DC-4	DIN 7/16	1.25	1-50	Bidirectional	49.5(L)*38(φ)
RFHB06XXDC10	10	DC-6	DIN 7/16	1.25	1-50	Bidirectional	49.5(L)*38(φ)

15 Watt, N, SMA, 4.3-10, Up to 18GHz

Part Number	Avg Power (W)	Freq Range (GHz)	Connector	VSWR Max	Attenuations (dB)	Direction	Dimensions (mm)
RFHB04XXNC15	15	DC-4	N	1.2	1-40	Bidirectional	49.5(L)*30(φ)
RFHB06XXNC15	15	DC-6	N	1.25	1-40	Bidirectional	49.5(L)*30(φ)
RFHB08XXNC15	15	DC-8.5	N	1.25	1-40	Bidirectional	49.5(L)*30(φ)
RFHB12XXNC15	15	DC-12.4	N	1.35	1-40	Bidirectional	49.5(L)*30(φ)
RFHB18XXNC15	15	DC-18	N	1.45	1-40	Bidirectional	49.5(L)*30(φ)
RFHB04XXSC15	15	DC-4	SMA	1.2	1-40	Bidirectional	34(L)*15.8(φ)
RFHB06XXSC15	15	DC-6	SMA	1.25	1-40	Bidirectional	34(L)*15.8(φ)
RFHB08XXSC15	15	DC-8.5	SMA	1.25	1-40	Bidirectional	34(L)*15.8(φ)
RFHB12XXSC15	15	DC-12.4	SMA	1.35	1-40	Bidirectional	34(L)*15.8(φ)
RFHB18XXSC15	15	DC-18	SMA	1.45	1-40	Bidirectional	34(L)*15.8(φ)
RFHB03XX4310C15	15	DC-3	4.3-10	1.15	1-50	Bidirectional	49.5(L)*25(φ)
RFHB06XX4310C15	15	DC-6	4.3-10	1.2	1-50	Bidirectional	49.5(L)*25(φ)

20 Watt, N, Up to 18GHz

Part Number	Avg Power (W)	Freq Range (GHz)	Connector	VSWR Max	Attenuations (dB)	Direction	Dimensions (mm)
RFHB04XXNC20	20	DC-4	N	1.2	1-60	Bidirectional	49.5(L)*38(φ)
RFHB06XXNC20	20	DC-6	N	1.25	1-60	Bidirectional	49.5(L)*38(φ)
RFHB08XXNC20	20	DC-8.5	N	1.25	1-60	Bidirectional	49.5(L)*38(φ)
RFHB12XXNC20	20	DC-12.4	N	1.35	1-60	Bidirectional	49.5(L)*38(φ)
RFHB18XXNC20	20	DC-18	N	1.45	1-60	Bidirectional	49.5(L)*38(φ)

20 Watt, SMA, TNC, Up to 18GHz

Part Number	Avg Power (W)	Freq Range (GHz)	Connector	VSWR Max	Attenuations (dB)	Direction	Dimensions (mm)
RFHB04XXSC20	20	DC-4	SMA	1.15	1-40	Bidirectional	40(L)*38(φ)
RFHB06XXSC20	20	DC-6	SMA	1.2	1-40	Bidirectional	40(L)*38(φ)
RFHB08XXSC20	20	DC-8.5	SMA	1.2	1-40	Bidirectional	40(L)*38(φ)
RFHB12XXSC20	20	DC-12.4	SMA	1.25	1-40	Bidirectional	40(L)*38(φ)
RFHB18XXSC20	20	DC-18	SMA	1.35	1-40	Bidirectional	40(L)*38(φ)
RFHB04XXTC20	20	DC-4	TNC	1.2	1-40	Bidirectional	50(L)*38(φ)
RFHB06XXTC20	20	DC-6	TNC	1.25	1-40	Bidirectional	50(L)*38(φ)
RFHB08XXTC20	20	DC-8.5	TNC	1.25	1-40	Bidirectional	50(L)*38(φ)
RFHB12XXTC20	20	DC-12.4	TNC	1.35	1-40	Bidirectional	50(L)*38(φ)
RFHB18XXTC20	20	DC-18	TNC	1.45	1-40	Bidirectional	50(L)*38(φ)

25 Watt, N, SMA, TNC, BNC, 4.3-10, DIN 7/16, Up to 18GHz

Part Number	Avg Power (W)	Freq Range (GHz)	Connector	VSWR Max	Attenuations (dB)	Direction	Dimensions (mm)
RFHB04XXNC25	25	DC-4	N	1.2	1-50	Bidirectional	49.5(L)*38(φ)
RFHB06XXNC25	25	DC-6	N	1.25	1-50	Bidirectional	49.5(L)*38(φ)
RFHB08XXNC25	25	DC-8.5	N	1.25	1-50	Bidirectional	49.5(L)*38(φ)
RFHB12XXNC25	25	DC-12.4	N	1.35	1-50	Bidirectional	49.5(L)*38(φ)
RFHB18XXNC25	25	DC-18	N	1.45	1-50	Bidirectional	49.5(L)*38(φ)
RFHB04XXNA25-A	25	DC-4	N	1.20	1-50	Bidirectional	54(L)*44(φ)
RFHB06XXNA25-A	25	DC-6	N	1.25	1-50	Bidirectional	54(L)*44(φ)
RFHB08XXNA25-A	25	DC-8.5	N	1.25	1-50	Bidirectional	54(L)*44(φ)
RFHB12XXNA25-A	25	DC-12.4	N	1.35	1-50	Bidirectional	54(L)*44(φ)
RFHB18XXNA25-A	25	DC-18	N	1.45	1-50	Bidirectional	54(L)*44(φ)
RFHB04XXSC25	25	DC-4	SMA	1.15	1-40	Bidirectional	40(L)*38(φ)
RFHB06XXSC25	25	DC-6	SMA	1.2	1-40	Bidirectional	40(L)*38(φ)
RFHB08XXSC25	25	DC-8.5	SMA	1.2	1-40	Bidirectional	40(L)*38(φ)
RFHB12XXSC25	25	DC-12.4	SMA	1.25	1-40	Bidirectional	40(L)*38(φ)
RFHB18XXSC25	25	DC-18	SMA	1.35	1-40	Bidirectional	40(L)*38(φ)
RFHB04XXTC25	25	DC-4	TNC	1.20	1-50	Bidirectional	70(L)*38(φ)
RFHB06XXTC25	25	DC-6	TNC	1.25	1-50	Bidirectional	70(L)*38(φ)
RFHB08XXTC25	25	DC-8.5	TNC	1.25	1-50	Bidirectional	70(L)*38(φ)
RFHB12XXTC25	25	DC-12.4	TNC	1.35	1-50	Bidirectional	70(L)*38(φ)
RFHB18XXTC25	25	DC-18	TNC	1.45	1-50	Bidirectional	70(L)*38(φ)
RFHB03XXBC25	25	DC-3	BNC	1.25	1-50	Bidirectional	54(L)*44(φ)
RFHB06XXBC25	25	DC-6	BNC	1.25	1-50	Bidirectional	54(L)*44(φ)
RFHB03XX4310C25	25	DC-3	4.3-10	1.20	1-40	Bidirectional	70(L)*38(φ)
RFHB06XX4310C25	25	DC-6	4.3-10	1.25	1-40	Bidirectional	70(L)*38(φ)
RFHB04XXDC25	25	DC-4	DIN 7/16	1.20	1-40	Bidirectional	54(L)*44(φ)
RFHB06XXDC25	25	DC-6	DIN 7/16	1.25	1-40	Bidirectional	54(L)*44(φ)

30W to 100W ≤ 18GHz

30 Watt, N Type, Up to 18GHz

Part Number	Avg Power (W)	Freq Range (GHz)	Connector	VSWR Max	Attenuations (dB)	Direction	Dimensions (mm)
RFH04XXNC30	30	DC-4	N	1.2	1-50	Unidirectional	70(L)*38(φ)
RFH06XXNC30	30	DC-6	N	1.25	1-50	Unidirectional	70(L)*38(φ)
RFH08XXNC30	30	DC-8.5	N	1.25	1-50	Unidirectional	70(L)*38(φ)
RFH12XXNC30	30	DC-12.4	N	1.35	1-50	Unidirectional	70(L)*38(φ)
RFH18XXNC30	30	DC-18	N	1.45	1-50	Unidirectional	70(L)*38(φ)

50 Watt, N Type, Up to 18GHz

Part Number	Avg Power (W)	Freq Range (GHz)	Connector	VSWR Max	Attenuations (dB)	Direction	Dimensions (mm)
RFHB03XXNC50	50	DC-3	N	1.15	1-50	Bidirectional	79(L)*45(φ)
RFHB06XXNC50	50	DC-6	N	1.25	1-50	Bidirectional	79(L)*45(φ)
RFHB08XXNC50	50	DC-8.5	N	1.25	1-50	Bidirectional	79(L)*45(φ)
RFHB04XXNC50-A	50	DC-4	N	1.20	1-50	Bidirectional	70(L)*64(φ)
RFHB06XXNC50-A	50	DC-6	N	1.25	1-50	Bidirectional	70(L)*64(φ)
RFHB08XXNC50-A	50	DC-8.5	N	1.25	1-50	Bidirectional	70(L)*64(φ)
RFHB12XXNC50-A	50	DC-12.4	N	1.35	1-50	Bidirectional	70(L)*64(φ)
RFHB18XXNC50-A	50	DC-18	N	1.45	1-50	Bidirectional	70(L)*64(φ)
RFHB04XXNC50-D	50	DC-4	N	1.20	1-50	Bidirectional	70*110*120
RFHB06XXNC50-D	50	DC-6	N	1.25	1-50	Bidirectional	70*110*120
RFHB08XXNC50-D	50	DC-8.5	N	1.25	1-50	Bidirectional	70*110*120
RFHB12XXNC50-D	50	DC-12.4	N	1.35	1-50	Bidirectional	70*110*120
RFHB18XXNC50-D	50	DC-18	N	1.45	1-50	Bidirectional	70*110*120
RFHB04XXNC50-S	50	DC-4	N	1.20	1-50	Bidirectional	70*64*64
RFHB06XXNC50-S	50	DC-6	N	1.25	1-50	Bidirectional	70*64*64
RFHB08XXNC50-S	50	DC-8.5	N	1.25	1-50	Bidirectional	70*64*64
RFHB12XXNC50-S	50	DC-12.4	N	1.35	1-50	Bidirectional	70*64*64
RFHB18XXNC50-S	50	DC-18	N	1.45	1-50	Bidirectional	70*64*64
RFH04XXNA50	50	DC-4	N	1.2	1-50	Unidirectional	70(L)*64(φ)
RFH06XXNA50	50	DC-6	N	1.25	1-50	Unidirectional	70(L)*64(φ)
RFH08XXNA50	50	DC-8.5	N	1.25	1-50	Unidirectional	70(L)*64(φ)
RFH12XXNA50	50	DC-12.4	N	1.35	1-50	Unidirectional	70(L)*64(φ)
RFH18XXNA50	50	DC-18	N	1.45	1-50	Unidirectional	70(L)*64(φ)
RFH04XXND50-D	50	DC-4	N	1.2	1-50	Unidirectional	70*110*120
RFH06XXND50-D	50	DC-6	N	1.25	1-50	Unidirectional	70*110*120
RFH08XXND50-D	50	DC-8.5	N	1.25	1-50	Unidirectional	70*110*120
RFH12XXND50-D	50	DC-12.4	N	1.35	1-50	Unidirectional	70*110*120
RFH18XXND50-D	50	DC-18	N	1.45	1-50	Unidirectional	70*110*120

50 Watt, SMA, TNC, BNC, 4.3-10, Up to 18GHz

Part Number	Avg Power (W)	Freq Range (GHz)	Connector	VSWR Max	Attenuations (dB)	Direction	Dimensions (mm)	
RFHB04XXSC50-S	50	DC-4	SMA	1.20	3-40	Bidirectional	70*64*64	
RFHB06XXSC50-S	50	DC-6	SMA	1.25	3-40	Bidirectional	70*64*64	
RFHB08XXSC50-S	50	DC-8.5	SMA	1.25	3-40	Bidirectional	70*64*64	
RFHB12XXSC50-S	50	DC-12.4	SMA	1.35	3-40	Bidirectional	70*64*64	
RFHB18XXSC50-S	50	DC-18	SMA	1.45	3-40	Bidirectional	70*64*64	
RFH04XXSA50	50	DC-4	SMA	1.25	1-40	Unidirectional	70(L)*38(φ)	
RFH06XXSA50	50	DC-6	SMA	1.25	1-40	Unidirectional	70(L)*38(φ)	
RFH08XXSA50	50	DC-8.5	SMA	1.3	1-40	Unidirectional	70(L)*38(φ)	
RFH12XXSA50	50	DC-12.4	SMA	1.35	1-40	Unidirectional	70(L)*38(φ)	
RFH18XXSA50	50	DC-18	SMA	1.45	1-40	Unidirectional	70(L)*38(φ)	
RFH04XXSD50-D	50	DC-4	SMA	1.2	1-50	Unidirectional	70*110*120	
RFH06XXSD50-D	50	DC-6	SMA	1.25	1-50	Unidirectional	70*110*120	
RFH08XXSD50-D	50	DC-8.5	SMA	1.25	1-50	Unidirectional	70*110*120	
RFH12XXSD50-D	50	DC-12.4	SMA	1.35	1-50	Unidirectional	70*110*120	
RFH18XXSD50-D	50	DC-18	SMA	1.45	1-50	Unidirectional	70*110*120	
RFH04XXTD50	50	DC-4	TNC	1.20	1-50	Unidirectional	70(L)*64(φ)	
RFH06XXTD50	50	DC-6	TNC	1.25	1-50	Unidirectional	70(L)*64(φ)	
RFH08XXTD50	50	DC-8.5	TNC	1.25	1-50	Unidirectional	70(L)*64(φ)	
RFH12XXTD50	50	DC-12.4	TNC	1.35	1-50	Unidirectional	70(L)*64(φ)	
RFH18XXTD50	50	DC-18	TNC	1.45	1-50	Unidirectional	70(L)*64(φ)	
RFH04XXTD50-D	50	DC-4	TNC	1.20	1-50	Unidirectional	70*110*120	
RFH06XXTD50-D	50	DC-6	TNC	1.25	1-50	Unidirectional	70*110*120	
RFH08XXTD50-D	50	DC-8.5	TNC	1.25	1-50	Unidirectional	70*110*120	
RFH12XXTD50-D	50	DC-12.4	TNC	1.35	1-50	Unidirectional	70*110*120	
RFH18XXTD50-D	50	DC-18	TNC	1.45	1-50	Unidirectional	70*110*120	
RFH04XXTD50-S	50	DC-4	TNC	1.20	1-50	Unidirectional	70*64*64	
RFH06XXTD50-S	50	DC-6	TNC	1.25	1-50	Unidirectional	70*64*64	
RFH08XXTD50-S	50	DC-8.5	TNC	1.25	1-50	Unidirectional	70*64*64	
RFH12XXTD50-S	50	DC-12.4	TNC	1.35	1-50	Unidirectional	70*64*64	
RFH18XXTD50-S	50	DC-18	TNC	1.45	1-50	Unidirectional	70*64*64	
RFH04XXBD50	50	DC-4	BNC	1.2	1-50	Unidirectional	70(L)*64(φ)	
RFH04XXBD50-D	50	DC-4	BNC	1.20	1-50	Unidirectional	70*110*120	
RFH06XXBD50-D	50	DC-6	BNC	1.25	1-50	Unidirectional	70*110*120	
RFH04XXBD50-S	50	DC-4	BNC	1.20	1-50	Unidirectional	70*64*64	
RFH06XXBD50-S	50	DC-6	BNC	1.25	1-50	Unidirectional	70*64*64	
RFHB03XX4310C50	50	DC-3	4.3-10	1.20	1-50	Bidirectional	79(L)*45(φ)	
RFHB06XX4310C50	50	DC-6	4.3-10	1.25	1-50	Bidirectional	79(L)*45(φ)	
RFH03XX4310D50	50	DC-3	4.3-10	1.20	1-30	Unidirectional	70(L)*41(φ)	
RFH06XX4310D50	50	DC-6	4.3-10	1.25	1-30	Unidirectional	70(L)*41(φ)	
RFH04XX4310D50-D	50	DC-4	4.3-10	1.20	1-50	Unidirectional	70*110*120	
RFH06XX4310D50-D	50	DC-6	4.3-10	1.25	1-50	Unidirectional	70*110*120	
RFH04XX4310D50-S	50	DC-4	4.3-10	1.20	1-50	Unidirectional	70*64*64	
RFH06XX4310D50-S	50	DC-6	4.3-10	1.25	1-50	Unidirectional	70*64*64	

75 Watt, N, SMA, Up to 18GHz

Part Number	Avg Power (W)	Freq Range (GHz)	Connector	VSWR Max	Attenuations (dB)	Direction	Dimensions (mm)	
RFHB03XXNC75	75	DC-3	N	1.2	6-60	Bidirectional	121(L)*64(φ)	
RFHB04XXNC75	75	DC-4	N	1.20	6-60	Bidirectional	121(L)*64(φ)	
RFHB06XXNC75	75	DC-6	N	1.25	6-60	Bidirectional	121(L)*64(φ)	
RFHB08XXNC75	75	DC-8.5	N	1.25	6-60	Bidirectional	121(L)*64(φ)	
RFHB12XXNC75	75	DC-12.4	N	1.35	6-60	Bidirectional	121(L)*64(φ)	
RFHB18XXNC75	75	DC-18	N	1.45	6-60	Bidirectional	121(L)*64(φ)	
RFHB04XXNC75-S	75	DC-4	N	1.20	6-60	Bidirectional	105*64*64	
RFHB06XXNC75-S	75	DC-6	N	1.25	6-60	Bidirectional	105*64*64	
RFHB08XXNC75-S	75	DC-8.5	N	1.25	6-60	Bidirectional	105*64*64	
RFHB12XXNC75-S	75	DC-12.4	N	1.35	6-60	Bidirectional	105*64*64	
RFHB18XXNC75-S	75	DC-18	N	1.45	6-60	Bidirectional	105*64*64	
RFHB03XXNC75-D	75	DC-3	N	1.2	6-60	Bidirectional	105*64*64	
RFHB06XXNC75-D1	75	DC-6	N	1.25	10-60	Bidirectional	79*79*52	
RFHB04XXSC75	75	DC-4	SMA	1.20	6-60	Bidirectional	121(L)*64(φ)	
RFHB06XXSC75	75	DC-6	SMA	1.25	6-60	Bidirectional	121(L)*64(φ)	
RFHB08XXSC75	75	DC-8.5	SMA	1.25	6-60	Bidirectional	121(L)*64(φ)	
RFHB12XXSC75	75	DC-12.4	SMA	1.35	6-60	Bidirectional	121(L)*64(φ)	
RFHB18XXSC75	75	DC-18	SMA	1.45	6-60	Bidirectional	121(L)*64(φ)	
RFHB04XXSC75-S	75	DC-4	SMA	1.20	6-60	Bidirectional	105*64*64	
RFHB06XXSC75-S	75	DC-6	SMA	1.25	6-60	Bidirectional	105*64*64	
RFHB08XXSC75-S	75	DC-8.5	SMA	1.25	6-60	Bidirectional	105*64*64	
RFHB12XXSC75-S	75	DC-12.4	SMA	1.35	6-60	Bidirectional	105*64*64	
RFHB18XXSC75-S	75	DC-18	SMA	1.45	6-60	Bidirectional	105*64*64	

100 Watt, N Type, Up to 18GHz

Part Number	Avg Power (W)	Freq Range (GHz)	Connector	VSWR Max	Attenuations (dB)	Direction	Dimensions (mm)	
RFHB04XXNC100	100	DC-4	N	1.20	6-60	Bidirectional	121(L)*64(φ)	
RFHB06XXNC100	100	DC-6	N	1.25	6-60	Bidirectional	121(L)*64(φ)	
RFHB08XXNC100	100	DC-8.5	N	1.25	6-60	Bidirectional	121(L)*64(φ)	
RFHB12XXNC100	100	DC-12.4	N	1.35	6-60	Bidirectional	121(L)*64(φ)	
RFHB18XXNC100	100	DC-18	N	1.45	6-60	Bidirectional	121(L)*64(φ)	
RFHB04XXNC100-D	100	DC-4	N	1.2	6-60	Bidirectional	152*110*120	
RFHB06XXNC100-D	100	DC-6	N	1.25	6-60	Bidirectional	152*110*120	
RFHB08XXNC100-D	100	DC-8.5	N	1.25	6-60	Bidirectional	152*110*120	
RFHB12XXNC100-D	100	DC-12.4	N	1.35	6-60	Bidirectional	152*110*120	
RFHB18XXNC100-D	100	DC-18	N	1.45	6-60	Bidirectional	152*110*120	
RFHB04XXNA100-E	100	DC-4	N	1.20	6-60	Bidirectional	101*110*120	
RFHB06XXNA100-E	100	DC-6	N	1.25	6-60	Bidirectional	101*110*120	
RFHB08XXNA100-E	100	DC-8.5	N	1.25	6-60	Bidirectional	101*110*120	
RFHB12XXNA100-E	100	DC-12.4	N	1.35	6-60	Bidirectional	101*110*120	
RFHB18XXNA100-E	100	DC-18	N	1.45	6-60	Bidirectional	101*110*120	

Part Number	Avg Power (W)	Freq Range (GHz)	Connector	VSWR Max	Attenuations (dB)	Direction	Dimensions (mm)
RFH04XXND100	100	DC-4	N	1.2	6-60	Unidirectional	121(L)*64(φ)
RFH06XXND100	100	DC-6	N	1.25	6-60	Unidirectional	121(L)*64(φ)
RFH08XXND100	100	DC-8.5	N	1.25	6-60	Unidirectional	121(L)*64(φ)
RFH12XXND100	100	DC-12.4	N	1.35	6-60	Unidirectional	121(L)*64(φ)
RFH18XXND100	100	DC-18	N	1.45	6-60	Unidirectional	121(L)*64(φ)
RFH04XXND100-D	100	DC-4	N	1.2	6-60	Unidirectional	101*110*120
RFH06XXND100-D	100	DC-6	N	1.25	6-60	Unidirectional	101*110*120
RFH08XXND100-D	100	DC-8.5	N	1.25	6-60	Unidirectional	101*110*120
RFH12XXND100-D	100	DC-12.4	N	1.35	6-60	Unidirectional	101*110*120
RFH18XXND100-D	100	DC-18	N	1.45	6-60	Unidirectional	101*110*120
RFH04XXNA100-D	100	DC-4	N	1.20	6-60	Unidirectional	101*110*120
RFH06XXNA100-D	100	DC-6	N	1.25	6-60	Unidirectional	101*110*120
RFH08XXNA100-D	100	DC-8.5	N	1.25	6-60	Unidirectional	101*110*120
RFH12XXNA100-D	100	DC-12.4	N	1.35	6-60	Unidirectional	101*110*120
RFH18XXNA100-D	100	DC-18	N	1.45	6-60	Unidirectional	101*110*120

100 Watt, SMA, Up to 18GHz

Part Number	Avg Power (W)	Freq Range (GHz)	Connector	VSWR Max	Attenuations (dB)	Direction	Dimensions (mm)
RFHB04XXSC100	100	DC-4	SMA	1.20	6-60	Bidirectional	121(L)*64(φ)
RFHB06XXSC100	100	DC-6	SMA	1.25	6-60	Bidirectional	121(L)*64(φ)
RFHB08XXSC100	100	DC-8.5	SMA	1.25	6-60	Bidirectional	121(L)*64(φ)
RFHB12XXSC100	100	DC-12.4	SMA	1.35	6-60	Bidirectional	121(L)*64(φ)
RFHB18XXSC100	100	DC-18	SMA	1.45	6-60	Bidirectional	121(L)*64(φ)
RFHB03XXSA100-D	100	DC-3	SMA	1.25	6-60	Bidirectional	101*110*120
RFHB06XXSA100-D	100	DC-6	SMA	1.25	6-60	Bidirectional	101*110*120
RFHB08XXSA100-D	100	DC-8.5	SMA	1.25	6-60	Bidirectional	101*110*120
RFHB12XXSA100-D	100	DC-12.4	SMA	1.35	6-60	Bidirectional	101*110*120
RFHB18XXSA100-D	100	DC-18	SMA	1.45	6-60	Bidirectional	101*110*120
RFH04XXSD100	100	DC-4	SMA	1.20	6-60	Unidirectional	121(L)*64(φ)
RFH06XXSD100	100	DC-6	SMA	1.25	6-60	Unidirectional	121(L)*64(φ)
RFH08XXSD100	100	DC-8.5	SMA	1.25	6-60	Unidirectional	121(L)*64(φ)
RFH12XXSD100	100	DC-12.4	SMA	1.35	6-60	Unidirectional	121(L)*64(φ)
RFH18XXSD100	100	DC-18	SMA	1.45	6-60	Unidirectional	121(L)*64(φ)
RFH04XXSD100-D	100	DC-4	SMA	1.2	6-60	Unidirectional	101*110*120
RFH06XXSD100-D	100	DC-6	SMA	1.25	6-60	Unidirectional	101*110*120
RFH08XXSD100-D	100	DC-8.5	SMA	1.25	6-60	Unidirectional	101*110*120
RFH12XXSD100-D	100	DC-12.4	SMA	1.35	6-60	Unidirectional	101*110*120
RFH18XXSD100-D	100	DC-18	SMA	1.45	6-60	Unidirectional	101*110*120

100 Watt, TNC, BNC, 4.3-10, DIN 7/16, Up to 18GHz

Part Number	Avg Power (W)	Freq Range (GHz)	Connector	VSWR Max	Attenuations (dB)	Direction	Dimensions (mm)	
RFH04XXTD100	100	DC-4	TNC	1.20	6-40	Unidirectional	121(L)*64(φ)	
RFH06XXTD100	100	DC-6	TNC	1.25	6-40	Unidirectional	121(L)*64(φ)	
RFH08XXTD100	100	DC-8.5	TNC	1.25	6-40	Unidirectional	121(L)*64(φ)	
RFH12XXTD100	100	DC-12.4	TNC	1.35	6-40	Unidirectional	121(L)*64(φ)	
RFH18XXTD100	100	DC-18	TNC	1.45	6-40	Unidirectional	121(L)*64(φ)	
RFH04XXTD100-D	100	DC-4	TNC	1.20	6-60	Unidirectional	101*110*120	
RFH06XXTD100-D	100	DC-6	TNC	1.25	6-60	Unidirectional	101*110*120	
RFH08XXTD100-D	100	DC-8.5	TNC	1.25	6-60	Unidirectional	101*110*120	
RFH12XXTD100-D	100	DC-12.4	TNC	1.35	6-60	Unidirectional	101*110*120	
RFH18XXTD100-D	100	DC-18	TNC	1.45	6-60	Unidirectional	101*110*120	
RFH04XXTD100-S	100	DC-4	TNC	1.20	6-60	Unidirectional	105*64*64	
RFH06XXTD100-S	100	DC-6	TNC	1.25	6-60	Unidirectional	105*64*64	
RFH08XXTD100-S	100	DC-8.5	TNC	1.25	6-60	Unidirectional	105*64*64	
RFH12XXTD100-S	100	DC-12.4	TNC	1.35	6-60	Unidirectional	105*64*64	
RFH18XXTD100-S	100	DC-18	TNC	1.45	6-60	Unidirectional	105*64*64	
RFH04XXBD100	100	DC-4	BNC	1.20	6-60	Unidirectional	121(L)*64(φ)	
RFH06XXBD100	100	DC-6	BNC	1.25	6-60	Unidirectional	121(L)*64(φ)	
RFH04XXBD100-D	100	DC-4	BNC	1.20	6-60	Unidirectional	101*110*120	
RFH06XXBD100-D	100	DC-6	BNC	1.25	6-60	Unidirectional	101*110*120	
RFH04XXBD100-S	100	DC-4	BNC	1.20	6-60	Unidirectional	105*64*64	
RFH06XXBD100-S	100	DC-6	BNC	1.25	6-60	Unidirectional	105*64*64	
RFH03XX4310D100	100	DC-3	4.3-10	1.20	6-60	Unidirectional	121(L)*64(φ)	
RFH06XX4310D100	100	DC-6	4.3-10	1.25	6-60	Unidirectional	121(L)*64(φ)	
RFH04XX4310A100	100	DC-4	4.3-10	1.20	6-60	Unidirectional	121(L)*64(φ)	
RFH06XX4310A100	100	DC-6	4.3-10	1.25	6-60	Unidirectional	121(L)*64(φ)	
RFH04XX4310D100-D	100	DC-4	4.3-10	1.20	6-60	Unidirectional	101*110*120	
RFH06XX4310D100-D	100	DC-6	4.3-10	1.25	6-60	Unidirectional	101*110*120	
RFH04XX4310D100-S	100	DC-4	4.3-10	1.20	6-60	Unidirectional	105*64*64	
RFH06XX4310D100-S	100	DC-6	4.3-10	1.25	6-60	Unidirectional	105*64*64	
RFHB04XXDC100-D	100	DC-4	DIN 7/16	1.20	6-40	Bidirectional	152*110*120	
RFHB06XXDC100-D	100	DC-6	DIN 7/16	1.25	6-40	Bidirectional	152*110*120	
RFH04XXDD100-D	100	DC-4	DIN 7/16	1.20	6-30	Unidirectional	101*110*120	
RFH06XXDD100-D	100	DC-6	DIN 7/16	1.25	6-30	Unidirectional	101*110*120	

150W to 2000W ≤ 18GHz

150 Watt, N Type, Up to 18GHz

Part Number	Avg Power (W)	Freq Range (GHz)	Connector	VSWR Max	Attenuations (dB)	Direction	Dimensions (mm)
RFH04XXND150-D	150	DC-4	N	1.2	6-60	Unidirectional	152*110*120
RFH06XXND150-D	150	DC-6	N	1.25	6-60	Unidirectional	152*110*120
RFH08XXND150-D	150	DC-8.5	N	1.25	6-60	Unidirectional	152*110*120
RFH12XXND150-D	150	DC-12.4	N	1.35	6-60	Unidirectional	152*110*120
RFH18XXND150-D	150	DC-18	N	1.45	6-60	Unidirectional	152*110*120
RFH04XXNA150-D	150	DC-4	N	1.20	6-60	Unidirectional	152*110*120
RFH06XXNA150-D	150	DC-6	N	1.25	6-60	Unidirectional	152*110*120
RFH08XXNA150-D	150	DC-8.5	N	1.25	6-60	Unidirectional	152*110*120
RFH12XXNA150-D	150	DC-12.4	N	1.35	6-60	Unidirectional	152*110*120
RFH18XXNA150-D	150	DC-18	N	1.45	6-60	Unidirectional	152*110*120

200 Watt, N Type, Up to 18GHz

Part Number	Avg Power (W)	Freq Range (GHz)	Connector	VSWR Max	Attenuations (dB)	Direction	Dimensions (mm)
RFH04XXND200-D	200	DC-4	N	1.2	6-60	Unidirectional	203*110*120
RFH06XXND200-D	200	DC-6	N	1.25	6-60	Unidirectional	203*110*120
RFH08XXND200-D	200	DC-8.5	N	1.25	6-60	Unidirectional	203*110*120
RFH12XXND200-D	200	DC-12.4	N	1.35	6-60	Unidirectional	203*110*120
RFH18XXND200-D	200	DC-18	N	1.45	6-60	Unidirectional	203*110*120

250 Watt, N Type, Up to 18GHz

Part Number	Avg Power (W)	Freq Range (GHz)	Connector	VSWR Max	Attenuations (dB)	Direction	Dimensions (mm)
RFH04XXND250-D	250	DC-4	N	1.2	10-60	Unidirectional	254*110*120
RFH06XXND250-D	250	DC-6	N	1.25	10-60	Unidirectional	254*110*120
RFH08XXND250-D	250	DC-8.5	N	1.25	10-60	Unidirectional	254*110*120
RFH12XXND250-D	250	DC-12.4	N	1.35	10-60	Unidirectional	254*110*120
RFH18XXND250-D	250	DC-18	N	1.45	10-60	Unidirectional	254*110*120

300 Watt, N Type, Up to 18GHz

Part Number	Avg Power (W)	Freq Range (GHz)	Connector	VSWR Max	Attenuations (dB)	Direction	Dimensions (mm)
RFH04XXND300-D	300	DC-4	N	1.2	10-60	Unidirectional	305*110*120
RFH06XXND300-D	300	DC-6	N	1.25	10-60	Unidirectional	305*110*120
RFH08XXND300-D	300	DC-8.5	N	1.25	10-60	Unidirectional	305*110*120
RFH12XXND300-D	300	DC-12.4	N	1.35	10-60	Unidirectional	305*110*120
RFH18XXND300-D	300	DC-18	N	1.45	10-60	Unidirectional	305*110*120

350 Watt, N Type, Up to 18GHz

Part Number	Avg Power (W)	Freq Range (GHz)	Connector	VSWR Max	Attenuations (dB)	Direction	Dimensions (mm)
RFH04XXND350-D	350	DC-4	N	1.20	20-60	Unidirectional	407*110*120
RFH06XXND350-D	350	DC-6	N	1.25	20-60	Unidirectional	407*110*120
RFH08XXND350-D	350	DC-8.5	N	1.25	20-60	Unidirectional	407*110*120
RFH12XXND350-D	350	DC-12.4	N	1.35	20-60	Unidirectional	407*110*120
RFH18XXND350-D	350	DC-18	N	1.45	20-60	Unidirectional	407*110*120

500 Watt, N Type, Up to 18GHz

Part Number	Avg Power (W)	Freq Range (GHz)	Connector	VSWR Max	Attenuations (dB)	Direction	Dimensions (mm)
RFH04XXND500-D	500	DC-4	N	1.2	10-60	Unidirectional	509*110*120
RFH06XXND500-D	500	DC-6	N	1.25	10-60	Unidirectional	509*110*120
RFH08XXND500-D	500	DC-8.5	N	1.25	10-60	Unidirectional	509*110*120
RFH12XXND500-D	500	DC-12.4	N	1.35	10-60	Unidirectional	509*110*120
RFH18XXND500-D	500	DC-18	N	1.45	10-60	Unidirectional	509*110*120

1000 Watt

Part Number	Avg Power (W)	Freq Range (GHz)	Connector	VSWR Max	Attenuations (dB)	Direction	Dimensions (mm)
RFH03XXND1000-D	1000	DC-3	N	1.4	40-50	447*160*410	407*110*120
RFH0450DA1000-DF	1000	DC-4	DIN 7/16	1.3	50	653*150*416	407*110*120

2000 Watt

Part Number	Avg Power (W)	Freq Range (GHz)	Connector	VSWR Max	Attenuations (dB)	Direction	Dimensions (mm)
RFH03XXNC2000-D	2000	DC-3	N	1.4	40-50	650×170×410	407*110*120

Conduction Cooled Attenuators

Conduction Cooled 75 Watt

Part Number	Avg Power (W)	Freq Range (GHz)	Connector	VSWR Max	Attenuations (dB)	Direction	Dimensions (mm)
RFHB06XXNC75-DM	75	DC-6	N	1.25	10-60	Bidirectional	79*79*52

Conduction Cooled 100 Watt

Part Number	Avg Power (W)	Freq Range (GHz)	Connector	VSWR Max	Attenuations (dB)	Direction	Dimensions (mm)
RFH04XXND100-DC	100	DC-4	N	1.2	6-60	Unidirectional	79.5*50.8*25.4
RFH06XXND100-DC	100	DC-6	N	1.25	6-60	Unidirectional	79.5*50.8*25.4
RFH08XXND100-DC	100	DC-8.5	N	1.25	6-60	Unidirectional	79.5*50.8*25.4
RFH12XXND100-DC	100	DC-12.4	N	1.35	6-60	Unidirectional	79.5*50.8*25.4
RFH18XXND100-DC	100	DC-18	N	1.45	6-60	Unidirectional	79.5*50.8*25.4

Conduction Cooled 150 Watt

Part Number	Avg Power (W)	Freq Range (GHz)	Connector	VSWR Max	Attenuations (dB)	Direction	Dimensions (mm)
RFH04XXNA150-DC	150	DC-4	N	1.2	6-60	Unidirectional	135*57*38
RFH06XXNA150-DC	150	DC-6	N	1.25	6-60	Unidirectional	135*57*38
RFH08XXNA150-DC	150	DC-8.5	N	1.25	6-60	Unidirectional	135*57*38
RFH12XXNA150-DC	150	DC-12.4	N	1.35	6-60	Unidirectional	135*57*38
RFH18XXNA150-DC	150	DC-18	N	1.45	6-60	Unidirectional	135*57*38
RFH04XXNB150-DM	150	DC-4	N	1.2	3-60	Unidirectional	105*79*52
RFH08XXNB150-DM	150	DC-8.5	N	1.25	3-60	Unidirectional	105*79*52
RFH04XXSA150-DC	150	DC-4	SMA	1.2	6-60	Unidirectional	135*57*38
RFH06XXSA150-DC	150	DC-6	SMA	1.25	6-60	Unidirectional	135*57*38
RFH08XXSA150-DC	150	DC-8.5	SMA	1.25	6-60	Unidirectional	135*57*38
RFH12XXSA150-DC	150	DC-12.4	SMA	1.35	6-60	Unidirectional	135*57*38
RFH18XXSA150-DC	150	DC-18	SMA	1.45	6-60	Unidirectional	135*57*38

Conduction Cooled 250 Watt

Part Number	Avg Power (W)	Freq Range (GHz)	Connector	VSWR Max	Attenuations (dB)	Direction	Dimensions (mm)
RFH04XXND250-DC	250	DC-4	N	1.2	10-60	Unidirectional	224*57*30
RFH06XXND250-DC	250	DC-6	N	1.25	10-60	Unidirectional	224*57*30
RFH08XXND250-DC	250	DC-8.5	N	1.25	10-60	Unidirectional	224*57*30
RFH12XXND250-DC	250	DC-12.4	N	1.35	10-60	Unidirectional	224*57*30
RFH18XXND250-DC	250	DC-18	N	1.45	10-60	Unidirectional	224*57*30
RFH04XXNA250-DM	250	DC-4	N	1.2	5-60	Unidirectional	170*79*52
RFH06XXNA250-DM	250	DC-6	N	1.25	5-60	Unidirectional	170*80*52
RFH08XXNA250-DM	250	DC-8.5	N	1.25	5-60	Unidirectional	170*79*52
RFH12XXNA250-DM	250	DC-12.4	N	1.35	5-60	Unidirectional	170*80*52

Low PIM Attenuators

RF ONE provides a range of low PIM attenuators with leading PIM performance guaranteed -160dBC in connector of N type, 4.3-10 and DIN 7/16, covering power rates of 25W, 50 W, 100 W, 200 W to suit different applications and budgets. Our broad array of fixed attenuators RFH and RFHB series are also available in low PIM options, typically 110dBC-115dBc.

160dBc

Part Number	Avg Power (W)	Freq Range (GHz)	Connector	Return Loss Min	3rd PIM Min	Dimensions (mm)
RALXX25NA-A	25	555-6000	N	18dB	160dBc	170*130*37
RALXX25FA-A	25	555-6000	4.3-10	18dB	160dBc	170*130*37
RALXX50NA-A	50	555-6000	N	18dB	160dBc	170*130*37
RALXX50FA-A	50	555-6000	4.3-10	18dB	160dBc	170*130*37
RALXX100NA-A	100	555-6000	N	18dB	160dBc	170*130*71
RALXX100FA-A	100	555-6000	4.3-10	18dB	160dBc	170*130*71
RALXX200NA-A	200	555-6000	N	18dB	160dBc	170*130*108
RALXX200FA-A	200	555-6000	4.3-10	18dB	160dBc	170*130*108
RAL30200NA-C	200	400-6000	N	18dB	160dBc	215*130*108
RAL30200FA-C	200	400-6000	4.3-10	18dB	160dBc	215*130*108

Typical PIM Test Data

Band	Tone Frequencies	Power Setpoints	Threshold	Stimulus	Response	Peak	Result
DCS1800	1,805 MHz 1,880 MHz	43 dBm 43 dBm	-160 dBc (Max)	Port 1	Port 1	-172.09 dBc	PASS

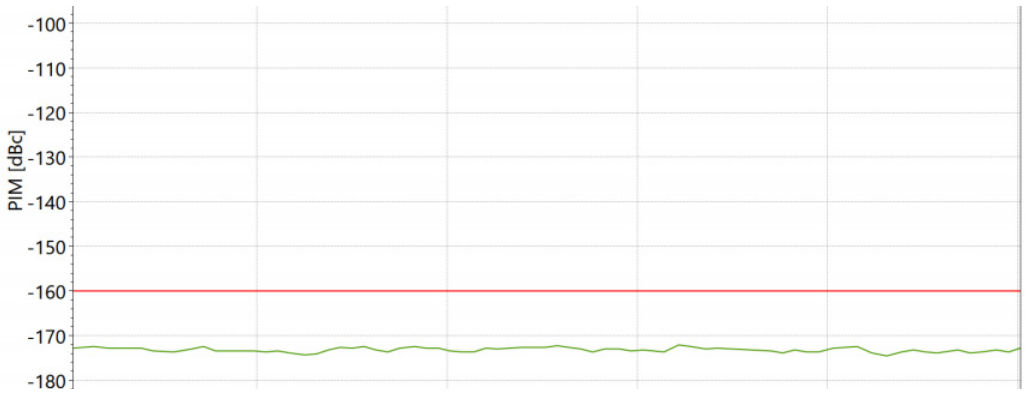

110dBc-115dBc

Our resistor attenuators RFH and RFHB series are offered with low PIM options, 100% PIM test guaranteed as -105dBc to 110dBc at 1800MHz, 2x10W tones, or 2x20W tones based on the attenuator's rated power. Each attenuator’s PIM data is recorded to its individual serial number.

FAQ for Coaxial Fixed Attenuators

What attenuation values can RF ONE build?

We have been building ceramic attenuator chips in-house since 2002. Technically all dB values can be built.

RF ONE has shipped 0/1/2/3/4/5/6/7/8/9/10/11/12/13/14/15/20/30/40/50/60dB attenuators. But please check with our sales if certain dB is available in stock for a selected model.

Does RF ONE provide both directional and bi-directional attenuators?

Bidirectional attenuators means the maximum rated power can be applied to either the input or output.

Unidirectional attenuators means the maximum rated power can only be applied to the input port. Unidirectional designs features smaller overall package sizes and reduced costs.

We have clearly specified the attenuator's direction on the datasheet. 2W till 25W by default are bi-directional. 30W-100W are available in both uni-directional and bi-directional types. RF One always laser mark IN/OUT on the uni-directional attenuator ports.

What special attenuators are available from RF ONE?

RF ONE has high flexibility to offer customized attenuators. The special designs include but not limited to the below list:

1. Custom mixed connector Configurations, for example, 4.3-10 male as output, N female as input.
2. Rare attenuation values such as 0dB, 11db, 13dB etc. are offered with no additional charge.
3. Lower VSWR & higher accuracy in a specified frequency range.

All of our attenuators are tested in VSWR and accuracy, test plots are provided for each shipment. If improved VSWR and accuracy are desired, contact our sales with your specific requirements.

4.Custom mounting holes or heat sink sizes available

5.Private label, customized laser markings available.

What resistors are applied to RF ONE's attenuators?

Our DC-18GHZ attenuator chips are built from thick film processing.

Our DC-27G/40G/50G/67G attenuators use aluminum nitride chips which are by thin-film processing.

We only choose resistive and insulating materials with a similarly low CTE which can reduce the effect of significant reflections due to impedance change at high temperature.

High temperature firing technology on the chips (usually greater than 900 degree) is used to produce a reliable connection between paste and substrate, which results in a long-lasting high stability over temperature as well as over power and time.

What are the temperature coefficient of RF ONE's attenuators?

Among the RF ONE's vast fixed attenuator family which covers a frequency range of DC to 67GHz, and the power handling ranges from 2 watts to 2000 watts, the temperature coefficient is specified as 0.0004dB/dB/°C.

Coaxial Terminations

RF ONE offers a broad selection of RF, Microwave and millimeter wave terminations up to 67GHz with avg power up to 1000W. Our RF loads come in SMA, N type, BNC, 4.3-10, DIN 7/16, QMA, QN, 3.5mm, 2.92mm, 2.4mm, 1.85mm connectors, by default 50 ohm.

Features and Advantages

- Wide choices of connectors, frequency and power rates
- RoHS & REACH compliant
- From stock or 1 week delivery
- Broad selections in low PIM levels
- Customized designs in outlines and optimized VSWR available

Termination Matrix

	1.85mm	2.4mm	2.92mm	3.5mm	SMP	SSMP	SSMA	SMA	N Type	TNC	4.3-10	DIN 7/16	BNC	QMA
2W	67GHz	50GHz	40GHz	33GHz	40GHz	40GHz	40GHz	27GHz	18GHz	18GHz	6GHz		6GHz	6GHz
5W	67GHz	50GHz	40GHz					18GHz	18GHz	18GHz	6GHz		6GHz	
10W	67GHz	50GHz	40GHz					18GHz	18GHz	18GHz	6GHz	6GHz	6GHz	
15W		50GHz	40GHz					18GHz	18GHz	18GHz	6GHz	6GHz	6GHz	
20W		50GHz	40GHz					18GHz	18GHz	18GHz	6GHz	6GHz	6GHz	
25W		50GHz	40GHz					18GHz	18GHz	18GHz	6GHz	6GHz	6GHz	
30W		50GHz	40GHz					18GHz	18GHz	18GHz	6GHz	6GHz	6GHz	
35W		50GHz	40GHz					18GHz	18GHz	18GHz	6GHz	6GHz	6GHz	
50W			40GHz					18GHz	18GHz	18GHz	6GHz	6GHz	6GHz	
100W			30GHz					18GHz	18GHz	18GHz	6GHz	6GHz	6GHz	
150W									18GHz			6GHz		
200W									18GHz			6GHz		
250W									18GHz			6GHz		
300W									18GHz			6GHz		
500W									18GHz			6GHz		
>500W									3GHz			3GHz		

1. The frequency in the matrix only represents the highest frequency available.
2. This matrix does not include all of our termination lineup, for needs of other Freq vs. Power vs. Connectors, please contact us at sales@rfone.cn.

Model Number Description

RFT	**XX**	**XX**	**XX**	**X**	**X**
Termination Series Code	**Frequency** 04=DC-4G 18=DC-18G 40=DC-40G	**Avg Power** 05=5W 100=100W	**Connector** S=SMA N= N Type B=BNC 4310=4.3-10	**Connector Gender** 1=Female 2=Male	**Additional** Default is round D=Rectangular and more...

1. e.g. RFT0602S2 refers to the coaxial terminations, DC-6GHz, 2Watts, SMA male, round style.
2. The dimensions in the following termination tables refer to heat sink size if heat sink exists.

mmWave(1.85mm, 2.4mm, 2.92mm, 3.5mm, 27GHz SMA, SMP)

1.85mm, DC-67GHz

Part Number	Avg Power (W)	Freq Range (GHz)	Connector	Gender	VSWR Max	Dimensions (mm)
RFT67021851	2	DC-67	1.85mm	Female	1.30	8.8(L)*9(φ)
RFT67021852	2	DC-67	1.85mm	Male	1.30	9.4(L)*6.4(φ)
RFT67051851	5	DC-67	1.85mm	Female	1.45	15.6(L)*28(φ)
RFT67051852	5	DC-67	1.85mm	Male	1.45	15.6(L)*28(φ)
RFT67101851	10	DC-67	1.85mm	Female	1.45	22.2(L)*34.8(φ)
RFT67101852	10	DC-67	1.85mm	Male	1.45	22.2(L)*34.8(φ)

2.4mm, DC-50GHz

Part Number	Avg Power (W)	Freq Range (GHz)	Connector	Gender	VSWR Max	Dimensions (mm)
RFT5002241	2	DC-50	2.4mm	Female	1.26	8.8(L)*9(φ)
RFT5002242	2	DC-50	2.4mm	Male	1.26	9.4(L)*6.4(φ)
RFT5005241	5	DC-50	2.4mm	Female	1.30	15.6(L)*28(φ)
RFT5005242	5	DC-50	2.4mm	Male	1.30	15.6(L)*28(φ)
RFT5008241	8	DC-50	2.4mm	Female	1.30	15.6(L)*34.8(φ)
RFT5008242	8	DC-50	2.4mm	Male	1.30	15.6(L)*34.8(φ)
RFT5010241	10	DC-50	2.4mm	Female	1.30	22.2(L)*28(φ)
RFT5010242	10	DC-50	2.4mm	Male	1.30	22.2(L)*28(φ)
RFT5015241	15	DC-50	2.4mm	Female	1.30	22.2(L)*34.8(φ)
RFT5015242	15	DC-50	2.4mm	Male	1.30	22.2(L)*34.8(φ)
RFT5020241	20	DC-50	2.4mm	Female	1.34	28.8(L)*40.8(φ)
RFT5020242	20	DC-50	2.4mm	Male	1.34	28.8(L)*40.8(φ)
RFT5030241	30	DC-50	2.4mm	Female	1.34	47.5(L)*40.8(φ)
RFT5030242	30	DC-50	2.4mm	Male	1.34	47.5(L)*40.8(φ)
RFT5035241	35	DC-50	2.4mm	Female	1.38	54.2(L)*40.8(φ)
RFT5035242	35	DC-50	2.4mm	Male	1.38	54.2(L)*40.8(φ)

2.92mm, DC-40GHz

Part Number	Avg Power (W)	Freq Range (GHz)	Connector	Gender	VSWR Max	Dimensions (mm)
RFT40022921	2	DC-40	2.92mm	Female	1.23	8.4(L)*9(φ)
RFT40022922	2	DC-40	2.92mm	Male	1.23	9.4(L)*6.4(φ)
RFT40052921	5	DC-40	2.92mm	Female	1.26	14.4(L)*28(φ)
RFT40052922	5	DC-40	2.92mm	Male	1.26	14.4(L)*28(φ)
RFT40102921	10	DC-40	2.92mm	Female	1.26	14.4(L)*34.8(φ)
RFT40102922	10	DC-40	2.92mm	Male	1.26	14.4(L)*34.8(φ)
RFT40152921	15	DC-40	2.92mm	Female	1.26	21.4(L)*34.8(φ)
RFT40152922	15	DC-40	2.92mm	Male	1.26	21.4(L)*34.8(φ)
RFT40202921	20	DC-40	2.92mm	Female	1.26	21.4(L)*40.8(φ)
RFT40202922	20	DC-40	2.92mm	Male	1.26	21.4(L)*40.8(φ)
RFT40252921	25	DC-40	2.92mm	Female	1.30	28.4(L)*40.8(φ)
RFT40252922	25	DC-40	2.92mm	Male	1.30	28.4(L)*40.8(φ)
RFT40302921	30	DC-40	2.92mm	Female	1.30	46.1(L)*34.8(φ)
RFT40302922	30	DC-40	2.92mm	Male	1.30	46.1(L)*34.8(φ)
RFT40352921	35	DC-40	2.92mm	Female	1.30	46.1(L)*40.8(φ)
RFT40352922	35	DC-40	2.92mm	Male	1.30	46.1(L)*40.8(φ)
RFT40402921	40	DC-40	2.92mm	Female	1.38	53.1(L)*40.8(φ)
RFT40402922	40	DC-40	2.92mm	Male	1.38	53.1(L)*40.8(φ)
RFT40452921	45	DC-40	2.92mm	Female	1.38	60.1(L)*40.8(φ)
RFT40452922	45	DC-40	2.92mm	Male	1.38	60.1(L)*40.8(φ)
RFT40502921	50	DC-40	2.92mm	Female	1.38	60.1(L)*49.8(φ)
RFT40502922	50	DC-40	2.92mm	Male	1.38	60.1(L)*49.8(φ)
RFT301002921	100	DC-30	2.92mm	Female	1.30	99(L)*49.8(φ)
RFT301002922	100	DC-30	2.92mm	Male	1.30	99(L)*49.8(φ)

3.5mm, DC-33GHz

Part Number	Avg Power (W)	Freq Range (GHz)	Connector	Gender	VSWR Max	Dimensions (mm)
RFT3301351	1	DC-33	3.5mm	Female	1.25	12.2(L)*6.5(φ)
RFT3301352	1	DC-33	3.5mm	Male	1.25	12.8(L)*6.5(φ)
RFT3302351-A	2	DC-33	3.5mm	Female	1.15	14.1(L)*7(φ)
RFT3302352-A	2	DC-33	3.5mm	Male	1.15	14.6(L)*7(φ)
RFT2702351	2	DC-27	3.5mm	Female	1.2	12.2(L)*6.5(φ)
RFT2702352	2	DC-27	3.5mm	Male	1.2	12.8(L)*6.5(φ)

SMA, DC-27GHz

Part Number	Avg Power (W)	Freq Range (GHz)	Connector	Gender	VSWR Max	Dimensions (mm)
RFT2702S1	2	DC-27	SMA	Female	1.25	13(L)*6.5(φ)
RFT2702S2	2	DC-27	SMA	Male	1.2	13.8(L)*6.5(φ)
RFT2702S2A	2	DC-27	SMA	Male	1.25	15.7(L)*6.4(φ)
RFT2702S2B	2	DC-27	SMA	Male	1.25	12.5(L)*6.4(φ)
RFT2701S2	1	DC-27	SMA	Male	1.25	8.7(L)*6.4(φ)

SSMA, SMP, SSMP, DC-40GHz

Part Number	Avg Power (W)	Freq Range (GHz)	Connector	Gender	VSWR Max	Dimensions (mm)
RFT4002SSMA1	2	DC-40	SSMA	Female	1.25	9.9(L)*7.3(φ)
RFT4002SSMA2	2	DC-40	SSMA	Male	1.25	10.9(L)*7.3(φ)
RFT4002SMP1	2	DC-40	SMP	Female	1.30	9.4(L)*4.8(φ)
RFT4002SMP2	2	DC-40	SMP	Male	1.30	9.9(L)*4.8(φ)
RFT4002SSMP1	2	DC-40	SSMP	Female	1.40	10(L)*4.8(φ)
RFT4002SSMP2	2	DC-40	SSMP	Male	1.40	10.8(L)*4.8(φ)

1W to 25W ≤ 18GHz

1 Watt, SMA, DC-18GHz

Part Number	Avg Power (W)	Freq Range (GHz)	Connector	Gender	VSWR Max	Dimensions (mm)
RFT1801S1	1	DC-18	SMA	Female	1.15	13(L)*6.5(φ)
RFT1801S2	1	DC-18	SMA	Male	1.15	14.1(L)*6.5(φ)

2 Watt, N, SMA, BNC, 4.3-10, QMA, QN, Up to 18GHz

Part Number	Avg Power (W)	Freq Range (GHz)	Connector	Gender	VSWR Max	Dimensions (mm)
RFT0402N2	2	DC-4	N	Male	1.15	30(L)*16.5(φ)
RFT0602N2	2	DC-6	N	Male	1.2	30(L)*16.5(φ)
RFT0802N2	2	DC-8.5	N	Male	1.2	30(L)*16.5(φ)
RFT1202N2	2	DC-12.4	N	Male	1.25	30(L)*16.5(φ)
RFT1802N2	2	DC-18	N	Male	1.3	30(L)*16.5(φ)
RFT1802N2A	2	DC-18	N	Male	1.15	34(L)*15.8(φ)
RFT0402N1	2	DC-4	N	Female	1.15	28(L)*16.5(φ)
RFT0602N1	2	DC-6	N	Female	1.2	28(L)*16.5(φ)
RFT0802N1	2	DC-8.5	N	Female	1.2	28(L)*16.5(φ)
RFT1202N1	2	DC-12.4	N	Female	1.25	28(L)*16.5(φ)
RFT1802N1	2	DC-18	N	Female	1.3	28(L)*16.5(φ)
RFT1802N1A	2	DC-18	N	Female	1.15	34(L)*15.8(φ)

Part Number	Avg Power (W)	Freq Range (GHz)	Connector	Gender	VSWR Max	Dimensions (mm)
RFT0602S2	2	DC-6	SMA	Male	1.2	20(L)*9(φ)
RFT0802S2	2	DC-8.5	SMA	Male	1.2	20(L)*9(φ)
RFT1202S2	2	DC-12.4	SMA	Male	1.25	20(L)*9(φ)
RFT1802S2	2	DC-18	SMA	Male	1.3	20(L)*9(φ)
RFT0602S1	2	DC-6	SMA	Female	1.2	19(L)*9(φ)
RFT0802S1	2	DC-8.5	SMA	Female	1.2	19(L)*9(φ)
RFT1202S1	2	DC-12.4	SMA	Female	1.25	19(L)*9(φ)
RFT1802S1	2	DC-18	SMA	Female	1.3	19(L)*9(φ)
RFT0402B2	2	DC-4	BNC	Male	1.15	25(L)*15(φ)
RFT0802B2	2	DC-8	BNC	Male	1.2	25(L)*15(φ)
RFT0402B1	2	DC-4	BNC	Female	1.15	22(L)*12.7(φ)
RFT0802B1	2	DC-8	BNC	Female	1.2	22(L)*12.7(φ)
RFT040243101	2	DC-4	4.3-10	Female	1.2	34(L)*17.5(φ)
RFT080243101	2	DC-8	4.3-10	Female	1.25	34(L)*17.5(φ)
RFT040243102	2	DC-4	4.3-10	Male	1.2	28(L)*17.5(φ)
RFT080243102	2	DC-8	4.3-10	Male	1.25	28(L)*17.5(φ)
RFT0402Q2	2	DC-4	QMA	Male	1.15	26.7(L)*10.5(φ)
RFT0602Q2	2	DC-6	QMA	Male	1.2	26.7(L)*10.5(φ)
RFT0602QN2	2	DC-6	QN	Male	1.2	30.3(L)*19(φ)

5 Watt, N, SMA, QN, Up to 18GHz

Part Number	Avg Power (W)	Freq Range (GHz)	Connector	Gender	VSWR Max	Dimensions (mm)
RFT0405N2	5	DC-4	N	Male	1.15	36(L)*16.5(φ)
RFT0605N2	5	DC-6	N	Male	1.2	36(L)*16.5(φ)
RFT0805N2	5	DC-8.5	N	Male	1.2	36(L)*16.5(φ)
RFT1205N2	5	DC-12.4	N	Male	1.25	36(L)*16.5(φ)
RFT1805N2	5	DC-18	N	Male	1.3	36(L)*16.5(φ)
RFT0405N1	5	DC-4	N	Female	1.15	35(L)*16.5(φ)
RFT0605N1	5	DC-6	N	Female	1.2	35(L)*16.5(φ)
RFT0805N1	5	DC-8.5	N	Female	1.2	35(L)*16.5(φ)
RFT1205N1	5	DC-12.4	N	Female	1.25	35(L)*16.5(φ)
RFT1805N1	5	DC-18	N	Female	1.3	35(L)*16.5(φ)
RFT0405S2	5	DC-4	SMA	Male	1.15	9(L)*19(φ)
RFT0605S2	5	DC-6	SMA	Male	1.2	9(L)*19(φ)
RFT0805S2	5	DC-8.5	SMA	Male	1.2	9(L)*19(φ)
RFT1205S2	5	DC-12.4	SMA	Male	1.25	9(L)*19(φ)
RFT1805S2	5	DC-18	SMA	Male	1.3	9(L)*19(φ)
RFT0405S1	5	DC-4	SMA	Female	1.15	9(L)*19(φ)
RFT0605S1	5	DC-6	SMA	Female	1.2	9(L)*19(φ)
RFT0805S1	5	DC-8.5	SMA	Female	1.2	9(L)*19(φ)
RFT1205S1	5	DC-12.4	SMA	Female	1.25	9(L)*19(φ)
RFT1805S1	5	DC-18	SMA	Female	1.3	9(L)*19(φ)
RFT0605QN2	5	DC-6	QN	Male	1.2	30.3(L)*19(φ)

10 Watt, N, SMA, TNC, Up to 18GHz

Part Number	Avg Power (W)	Freq Range (GHz)	Connector	Gender	VSWR Max	Dimensions (mm)	
RFT0410N2	10	DC-4	N	Male	1.15	16(L)*30(φ)	
RFT0610N2	10	DC-6	N	Male	1.2	16(L)*30(φ)	
RFT0810N2	10	DC-8.5	N	Male	1.2	16(L)*30(φ)	
RFT1210N2	10	DC-12.4	N	Male	1.25	16(L)*30(φ)	
RFT1810N2	10	DC-18	N	Male	1.3	16(L)*30(φ)	
RFT0410N1	10	DC-4	N	Female	1.2	26(L)*30(φ)	
RFT0610N1	10	DC-6	N	Female	1.25	26(L)*30(φ)	
RFT0810N1	10	DC-8.5	N	Female	1.25	26(L)*30(φ)	
RFT1210N1	10	DC-12.4	N	Female	1.3	26(L)*30(φ)	
RFT1810N1	10	DC-18	N	Female	1.4	26(L)*30(φ)	
RFT0410S2	10	DC-4	SMA	Male	1.2	28(L)*15.8(φ)	
RFT0610S2	10	DC-6	SMA	Male	1.25	28(L)*15.8(φ)	
RFT0810S2	10	DC-8.5	SMA	Male	1.25	28(L)*15.8(φ)	
RFT1210S2	10	DC-12.4	SMA	Male	1.35	28(L)*15.8(φ)	
RFT1810S2	10	DC-18	SMA	Male	1.4	28(L)*15.8(φ)	
RFT0410S1	10	DC-4	SMA	Female	1.15	28(L)*15.8(φ)	
RFT0610S1	10	DC-6	SMA	Female	1.2	28(L)*15.8(φ)	
RFT0810S1	10	DC-8.5	SMA	Female	1.2	28(L)*15.8(φ)	
RFT1210S1	10	DC-12.4	SMA	Female	1.25	28(L)*15.8(φ)	
RFT1810S1	10	DC-18	SMA	Female	1.3	28(L)*15.8(φ)	
RFT0410T2	10	DC-4	TNC	Male	1.15	17.5(L)*30(φ)	
RFT0610T2	10	DC-6	TNC	Male	1.25	17.5(L)*30(φ)	
RFT0810T2	10	DC-8.5	TNC	Male	1.25	17.5(L)*30(φ)	
RFT1210T2	10	DC-12.4	TNC	Male	1.35	17.5(L)*30(φ)	
RFT1810T2	10	DC-18	TNC	Male	1.45	17.5(L)*30(φ)	

15 Watt, N, Up to 18GHz

Part Number	Avg Power (W)	Freq Range (GHz)	Connector	Gender	VSWR Max	Dimensions (mm)	
RFT0415N2	15	DC-4	N	Male	1.2	49.5(L)*30(φ)	
RFT0615N2	15	DC-6	N	Male	1.25	49.5(L)*30(φ)	
RFT0815N2	15	DC-8.5	N	Male	1.25	49.5(L)*30(φ)	
RFT1215N2	15	DC-12.4	N	Male	1.3	49.5(L)*30(φ)	
RFT1815N2	15	DC-18	N	Male	1.4	49.5(L)*30(φ)	
RFT0415N1	15	DC-4	N	Female	1.2	49.5(L)*30(φ)	
RFT0615N1	15	DC-6	N	Female	1.25	49.5(L)*30(φ)	
RFT0815N1	15	DC-8.5	N	Female	1.25	49.5(L)*30(φ)	
RFT1215N1	15	DC-12.4	N	Female	1.3	49.5(L)*30(φ)	
RFT1815N1	15	DC-18	N	Female	1.4	49.5(L)*30(φ)	

15 Watt, SMA, Up to 18GHz

Part Number	Avg Power (W)	Freq Range (GHz)	Connector	Gender	VSWR Max	Dimensions (mm)
RFT0415S2	15	DC-4	SMA	Male	1.2	49.5(L)*30(φ)
RFT0615S2	15	DC-6	SMA	Male	1.25	49.5(L)*30(φ)
RFT0815S2	15	DC-8.5	SMA	Male	1.25	49.5(L)*30(φ)
RFT1215S2	15	DC-12.4	SMA	Male	1.3	49.5(L)*30(φ)
RFT1815S2	15	DC-18	SMA	Male	1.4	49.5(L)*30(φ)
RFT0415S1	15	DC-4	SMA	Female	1.2	49.5(L)*30(φ)
RFT0615S1	15	DC-6	SMA	Female	1.25	49.5(L)*30(φ)
RFT0815S1	15	DC-8.5	SMA	Female	1.25	49.5(L)*30(φ)
RFT1215S1	15	DC-12.4	SMA	Female	1.3	49.5(L)*30(φ)
RFT1815S1	15	DC-18	SMA	Female	1.4	49.5(L)*30(φ)

20 Watt, N, SMA, TNC, Up to 18GHz

Part Number	Avg Power (W)	Freq Range (GHz)	Connector	Gender	VSWR Max	Dimensions (mm)
RFT0420N2	20	DC-4	N	Male	1.2	50(L)*38(φ)
RFT0620N2	20	DC-6	N	Male	1.25	50(L)*38(φ)
RFT0820N2	20	DC-8.5	N	Male	1.25	50(L)*38(φ)
RFT1220N2	20	DC-12.4	N	Male	1.35	50(L)*38(φ)
RFT1820N2	20	DC-18	N	Male	1.4	50(L)*38(φ)
RFT0420S2	20	DC-4	SMA	Male	1.2	50(L)*38(φ)
RFT0620S2	20	DC-6	SMA	Male	1.25	50(L)*38(φ)
RFT0820S2	20	DC-8.5	SMA	Male	1.25	50(L)*38(φ)
RFT1220S2	20	DC-12.4	SMA	Male	1.3	50(L)*38(φ)
RFT1820S2	20	DC-18	SMA	Male	1.4	50(L)*38(φ)
RFT0420S1	20	DC-4	SMA	Female	1.2	50(L)*38(φ)
RFT0620S1	20	DC-6	SMA	Female	1.25	50(L)*38(φ)
RFT0820S1	20	DC-8.5	SMA	Female	1.25	50(L)*38(φ)
RFT1220S1	20	DC-12.4	SMA	Female	1.3	50(L)*38(φ)
RFT1820S1	20	DC-18	SMA	Female	1.4	50(L)*38(φ)
RFT0420T2	20	DC-4	TNC	Male	1.2	49.5(L)*38(φ)
RFT0620T2	20	DC-6	TNC	Male	1.25	49.5(L)*38(φ)
RFT0820T2	20	DC-8.5	TNC	Male	1.25	49.5(L)*38(φ)
RFT1220T2	20	DC-12.4	TNC	Male	1.3	49.5(L)*38(φ)
RFT1820T2	20	DC-18	TNC	Male	1.4	49.5(L)*38(φ)
RFT0420T1	20	DC-4	TNC	Female	1.2	49.5(L)*38(φ)
RFT0620T1	20	DC-6	TNC	Female	1.25	49.5(L)*38(φ)
RFT0820T1	20	DC-8.5	TNC	Female	1.25	49.5(L)*38(φ)
RFT1220T1	20	DC-12.4	TNC	Female	1.3	49.5(L)*38(φ)
RFT1820T1	20	DC-18	TNC	Female	1.4	49.5(L)*38(φ)

25 Watt, N, SMA, TNC, BNC, 4.3-10, DIN 7/16, Up to 18GHz

Part Number	Avg Power (W)	Freq Range (GHz)	Connector	Gender	VSWR Max	Dimensions (mm)	
RFT0425N1	25	DC-4	N	Female	1.2	54(L)*44(φ)	
RFT0625N1	25	DC-6	N	Female	1.25	54(L)*44(φ)	
RFT0825N1	25	DC-8.5	N	Female	1.25	54(L)*44(φ)	
RFT1225N1	25	DC-12.4	N	Female	1.35	54(L)*44(φ)	
RFT1825N1	25	DC-18	N	Female	1.4	54(L)*44(φ)	
RFT0425N2	25	DC-4	N	Male	1.2	49.5(L)*38(φ)	
RFT0625N2	25	DC-6	N	Male	1.25	49.5(L)*38(φ)	
RFT0825N2	25	DC-8.5	N	Male	1.25	49.5(L)*38(φ)	
RFT1225N2	25	DC-12.4	N	Male	1.35	49.5(L)*38(φ)	
RFT1825N2	25	DC-18	N	Male	1.4	49.5(L)*38(φ)	
RFT0425S2	25	DC-4	SMA	Male	1.15	40(L)*38(φ)	
RFT0625S2	25	DC-6	SMA	Male	1.2	40(L)*38(φ)	
RFT0825S2	25	DC-8.5	SMA	Male	1.2	40(L)*38(φ)	
RFT1225S2	25	DC-12.4	SMA	Male	1.25	40(L)*38(φ)	
RFT1825S2	25	DC-18	SMA	Male	1.3	40(L)*38(φ)	
RFT0425S1	25	DC-4	SMA	Female	1.15	40(L)*38(φ)	
RFT0625S1	25	DC-6	SMA	Female	1.2	40(L)*38(φ)	
RFT0825S1	25	DC-8.5	SMA	Female	1.2	40(L)*38(φ)	
RFT1225S1	25	DC-12.4	SMA	Female	1.25	40(L)*38(φ)	
RFT1825S1	25	DC-18	SMA	Female	1.3	40(L)*38(φ)	
RFT0425T2	25	DC-4	TNC	Male	1.2	54(L)*44(φ)	
RFT0625T2	25	DC-6	TNC	Male	1.25	54(L)*44(φ)	
RFT0825T2	25	DC-8.5	TNC	Male	1.25	54(L)*44(φ)	
RFT1225T2	25	DC-12.4	TNC	Male	1.35	54(L)*44(φ)	
RFT1825T2	25	DC-18	TNC	Male	1.4	54(L)*44(φ)	
RFT0425T1	25	DC-4	TNC	Female	1.2	54(L)*44(φ)	
RFT0625T1	25	DC-6	TNC	Female	1.25	54(L)*44(φ)	
RFT0825T1	25	DC-8.5	TNC	Female	1.25	54(L)*44(φ)	
RFT1225T1	25	DC-12.4	TNC	Female	1.35	54(L)*44(φ)	
RFT1825T1	25	DC-18	TNC	Female	1.4	54(L)*44(φ)	
RFT0425B2	25	DC-4	BNC	Male	1.15	49.5(L)*38(φ)	
RFT0625B2	25	DC-6	BNC	Male	1.2	49.5(L)*38(φ)	
RFT0425B1	25	DC-4	BNC	Female	1.15	49.5(L)*38(φ)	
RFT0625B1	25	DC-6	BNC	Female	1.2	49.5(L)*38(φ)	
RFT0425D2	25	DC-4	DIN 7/16	Male	1.2	49.5(L)*38(φ)	
RFT0625D2	25	DC-6	DIN 7/16	Male	1.25	49.5(L)*38(φ)	
RFT0425D1	25	DC-4	DIN 7/16	Female	1.2	49.5(L)*38(φ)	
RFT0625D1	25	DC-6	DIN 7/16	Female	1.25	49.5(L)*38(φ)	

30W to 100W ≤ 18GHz

30 Watt, N, Up to 18GHz

Part Number	Avg Power (W)	Freq Range (GHz)	Connector	Gender	VSWR Max	Dimensions (mm)
RFT0430N2	30	DC-4	N	Male	1.2	70(L)*38(φ)
RFT0630N2	30	DC-6	N	Male	1.25	70(L)*38(φ)
RFT0830N2	30	DC-8.5	N	Male	1.25	70(L)*38(φ)
RFT1230N2	30	DC-12.4	N	Male	1.35	70(L)*38(φ)
RFT1830N2	30	DC-18	N	Male	1.4	70(L)*38(φ)

35 Watt, N, Up to 18GHz

Part Number	Avg Power (W)	Freq Range (GHz)	Connector	Gender	VSWR Max	Dimensions (mm)
RFT0435N2	35	DC-4	N	Male	1.2	70(L)*41(φ)
RFT0635N2	35	DC-6	N	Male	1.25	70(L)*41(φ)
RFT0835N2	35	DC-8.5	N	Male	1.25	70(L)*41(φ)
RFT1235N2	35	DC-12.4	N	Male	1.35	70(L)*41(φ)
RFT1835N2	35	DC-18	N	Male	1.4	70(L)*41(φ)

50 Watt, N, Up to 18GHz

Part Number	Avg Power (W)	Freq Range (GHz)	Connector	Gender	VSWR Max	Dimensions (mm)
RFT0450N2	50	DC-4	N	Male	1.2	70(L)*64(φ)
RFT0650N2	50	DC-6	N	Male	1.25	70(L)*64(φ)
RFT0850N2	50	DC-8.5	N	Male	1.25	70(L)*64(φ)
RFT1250N2	50	DC-12.4	N	Male	1.35	70(L)*64(φ)
RFT1850N2	50	DC-18	N	Male	1.4	70(L)*64(φ)
RFT0450N1	50	DC-4	N	Female	1.2	70(L)*64(φ)
RFT0650N1	50	DC-6	N	Female	1.25	70(L)*64(φ)
RFT0850N1	50	DC-8.5	N	Female	1.25	70(L)*64(φ)
RFT1250N1	50	DC-12.4	N	Female	1.35	70(L)*64(φ)
RFT1850N1	50	DC-18	N	Female	1.4	70(L)*64(φ)
RFT0450N2-D	50	DC-4	N	Male	1.2	70*110*120
RFT0650N2-D	50	DC-6	N	Male	1.25	70*110*120
RFT0850N2-D	50	DC-8	N	Male	1.25	70*110*120
RFT1250N2-D	50	DC-12.4	N	Male	1.3	70*110*120
RFT1850N2-D	50	DC-18	N	Male	1.4	70*110*120
RFT0450N1-D	50	DC-4	N	Female	1.2	70*110*120
RFT0650N1-D	50	DC-6	N	Female	1.25	70*110*120
RFT0850N1-D	50	DC-8.5	N	Female	1.25	70*110*120
RFT1250N1-D	50	DC-12.4	N	Female	1.35	70*110*120
RFT1850N1-D	50	DC-18	N	Female	1.4	70*110*120

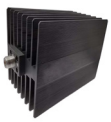

50 Watt, SMA, Up to 18GHz

Part Number	Avg Power (W)	Freq Range (GHz)	Connector	Gender	VSWR Max	Dimensions (mm)
RFT0450S2	50	DC-4	SMA	Male	1.2	70(L)*64(φ)
RFT0650S2	50	DC-6	SMA	Male	1.25	70(L)*64(φ)
RFT0850S2	50	DC-8.5	SMA	Male	1.25	70(L)*64(φ)
RFT1250S2	50	DC-12.4	SMA	Male	1.35	70(L)*64(φ)
RFT1850S2	50	DC-18	SMA	Male	1.4	70(L)*64(φ)
RFT0450S1	50	DC-4	SMA	Female	1.2	70(L)*64(φ)
RFT0650S1	50	DC-6	SMA	Female	1.25	70(L)*64(φ)
RFT0850S1	50	DC-8.5	SMA	Female	1.25	70(L)*64(φ)
RFT1250S1	50	DC-12.4	SMA	Female	1.35	70(L)*64(φ)
RFT1850S1	50	DC-18	SMA	Female	1.4	70(L)*64(φ)
RFT0450S2-D	50	DC-4	SMA	Male	1.2	70*110*120
RFT0650S2-D	50	DC-6	SMA	Male	1.25	70*110*120
RFT0850S2-D	50	DC-8.5	SMA	Male	1.25	70*110*120
RFT1250S2-D	50	DC-12.4	SMA	Male	1.35	70*110*120
RFT1850S2-D	50	DC-18	SMA	Male	1.4	70*110*120
RFT0450S1-D	50	DC-4	SMA	Female	1.2	70*110*120
RFT0650S1-D	50	DC-6	SMA	Female	1.25	70*110*120
RFT0850S1-D	50	DC-8.5	SMA	Female	1.25	70*110*120
RFT1250S1-D	50	DC-12.4	SMA	Female	1.35	70*110*120
RFT1850S1-D	50	DC-18	SMA	Female	1.4	70*110*120

50 Watt, TNC, 4.3-10, DIN 7/16, Up to 18GHz

Part Number	Avg Power (W)	Freq Range (GHz)	Connector	Gender	VSWR Max	Dimensions (mm)
RFT0450T2	50	DC-4	TNC	Male	1.2	70(L)*64(φ)
RFT0650T2	50	DC-6	TNC	Male	1.25	70(L)*64(φ)
RFT0850T2	50	DC-8.5	TNC	Male	1.25	70(L)*64(φ)
RFT1250T2	50	DC-12.4	TNC	Male	1.3	70(L)*64(φ)
RFT1850T2	50	DC-18	TNC	Male	1.4	70(L)*64(φ)
RFT0450T1	50	DC-4	TNC	Female	1.2	70(L)*64(φ)
RFT0650T1	50	DC-6	TNC	Female	1.25	70(L)*64(φ)
RFT0850T1	50	DC-8.5	TNC	Female	1.25	70(L)*64(φ)
RFT1250T1	50	DC-12.4	TNC	Female	1.3	70(L)*64(φ)
RFT1850T1	50	DC-18	TNC	Female	1.4	70(L)*64(φ)
RFT045043102	50	DC-4	4.3-10	Male	1.2	70(L)*64(φ)
RFT065043102	50	DC-6	4.3-10	Male	1.25	70(L)*64(φ)
RFT045043101	50	DC-4	4.3-10	Female	1.2	70(L)*64(φ)
RFT065043101	50	DC-6	4.3-10	Female	1.25	70(L)*64(φ)
RFT0450D2	50	DC-4	DIN 7/16	Male	1.2	70(L)*64(φ)
RFT0650D2	50	DC-6	DIN 7/16	Male	1.25	70(L)*64(φ)
RFT0450D1	50	DC-4	DIN 7/16	Female	1.2	70(L)*64(φ)
RFT0650D1	50	DC-6	DIN 7/16	Female	1.25	70(L)*64(φ)

100 Watt, N, Up to 18GHz

Part Number	Avg Power (W)	Freq Range (GHz)	Connector	Gender	VSWR Max	Dimensions (mm)
RFT04100N2	100	DC-4	N	Male	1.15	121(L)*64(φ)
RFT06100N2	100	DC-6	N	Male	1.2	121(L)*64(φ)
RFT08100N2	100	DC-8.5	N	Male	1.2	121(L)*64(φ)
RFT12100N2	100	DC-12.4	N	Male	1.25	121(L)*64(φ)
RFT18100N2	100	DC-18	N	Male	1.35	121(L)*64(φ)
RFT04100N1	100	DC-4	N	Female	1.15	121(L)*64(φ)
RFT06100N1	100	DC-6	N	Female	1.2	121(L)*64(φ)
RFT08100N1	100	DC-8.5	N	Female	1.2	121(L)*64(φ)
RFT12100N1	100	DC-12.4	N	Female	1.25	121(L)*64(φ)
RFT18100N1	100	DC-18	N	Female	1.35	121(L)*64(φ)
RFT04100N2-D	100	DC-4	N	Male	1.15	101*110*120
RFT06100N2-D	100	DC-6	N	Male	1.2	101*110*120
RFT08100N2-D	100	DC-8.5	N	Male	1.2	101*110*120
RFT12100N2-D	100	DC-12.4	N	Male	1.25	101*110*120
RFT18100N2-D	100	DC-18	N	Male	1.35	101*110*120
RFT04100N1-D	100	DC-4	N	Female	1.15	101*110*120
RFT06100N1-D	100	DC-6	N	Female	1.2	101*110*120
RFT08100N1-D	100	DC-8.5	N	Female	1.2	101*110*120
RFT12100N1-D	100	DC-12.4	N	Female	1.25	101*110*120
RFT18100N1-D	100	DC-18	N	Female	1.35	101*110*120

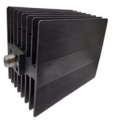

100 Watt, SMA, 4.3-10, DIN 7/16, Up to 18GHz

Part Number	Avg Power (W)	Freq Range (GHz)	Connector	Gender	VSWR Max	Dimensions (mm)
RFT04100S2	100	DC-4	SMA	Male	1.15	121(L)*64(φ)
RFT06100S2	100	DC-6	SMA	Male	1.2	121(L)*64(φ)
RFT08100S2	100	DC-8.5	SMA	Male	1.2	121(L)*64(φ)
RFT12100S2	100	DC-12.4	SMA	Male	1.25	121(L)*64(φ)
RFT18100S2	100	DC-18	SMA	Male	1.35	121(L)*64(φ)
RFT04100S1-D	100	DC-4	SMA	Female	1.15	101*110*120
RFT06100S1-D	100	DC-6	SMA	Female	1.2	101*110*120
RFT08100S1-D	100	DC-8.5	SMA	Female	1.2	101*110*120
RFT12100S1-D	100	DC-12.4	SMA	Female	1.25	101*110*120
RFT18100S1-D	100	DC-18	SMA	Female	1.35	101*110*120
RFT0410043102	100	DC-4	4.3-10	Male	1.2	121(L)*64(φ)
RFT0610043102	100	DC-6	4.3-10	Male	1.25	121(L)*64(φ)
RFT0410043101	100	DC-4	4.3-10	Female	1.2	121(L)*64(φ)
RFT0610043101	100	DC-6	4.3-10	Female	1.25	121(L)*64(φ)
RFT04100D2	100	DC-4	DIN 7/16	Male	1.2	121(L)*64(φ)
RFT06100D2	100	DC-6	DIN 7/16	Male	1.25	121(L)*64(φ)
RFT04100D1	100	DC-4	DIN 7/16	Female	1.2	121(L)*64(φ)
RFT06100D1	100	DC-6	DIN 7/16	Female	1.25	121(L)*64(φ)

150W to 500W ≤ 18GHz

150 Watt, N, Up to 18GHz

Part Number	Avg Power (W)	Freq Range (GHz)	Connector	Gender	VSWR Max	Dimensions (mm)
RFT04150N2-D	150	DC-4	N	Male	1.2	152*110*120
RFT06150N2-D	150	DC-6	N	Male	1.25	152*110*120
RFT08150N2-D	150	DC-8.5	N	Male	1.25	152*110*120
RFT12150N2-D	150	DC-12.4	N	Male	1.35	152*110*120
RFT18150N2-D	150	DC-18	N	Male	1.45	152*110*120
RFT04150N1-D	150	DC-4	N	Female	1.2	152*110*120
RFT06150N1-D	150	DC-6	N	Female	1.25	152*110*120
RFT08150N1-D	150	DC-8.5	N	Female	1.25	152*110*120
RFT12150N1-D	150	DC-12.4	N	Female	1.35	152*110*120
RFT18150N1-D	150	DC-18	N	Female	1.45	152*110*120

200 Watt, N, Up to 18GHz

Part Number	Avg Power (W)	Freq Range (GHz)	Connector	Gender	VSWR Max	Dimensions (mm)
RFT04200N1-D	200	DC-4	N	Female	1.2	203*110*120
RFT06200N1-D	200	DC-6	N	Female	1.25	203*110*120
RFT08200N1-D	200	DC-8.5	N	Female	1.25	203*110*120
RFT12200N1-D	200	DC-12.4	N	Female	1.35	203*110*120
RFT18200N1-D	200	DC-18	N	Female	1.45	203*110*120
RFT04200N2-D	200	DC-4	N	Male	1.2	203*110*120
RFT06200N2-D	200	DC-6	N	Male	1.25	203*110*120
RFT08200N2-D	200	DC-8.5	N	Male	1.25	203*110*120
RFT12200N2-D	200	DC-12.4	N	Male	1.35	203*110*120
RFT18200N2-D	200	DC-18	N	Male	1.45	203*110*120

250 Watt, N, Up to 18GHz

Part Number	Avg Power (W)	Freq Range (GHz)	Connector	Gender	VSWR Max	Dimensions (mm)
RFT04250N2-D	250	DC-4	N	Male	1.2	254*110*120
RFT06250N2-D	250	DC-6	N	Male	1.25	254*110*120
RFT08250N2-D	250	DC-8.5	N	Male	1.25	254*110*120
RFT12250N2-D	250	DC-12.4	N	Male	1.35	254*110*120
RFT18250N2-D	250	DC-18	N	Male	1.45	254*110*120
RFT04250N1-D	250	DC-4	N	Female	1.2	254*110*120
RFT06250N1-D	250	DC-6	N	Female	1.25	254*110*120
RFT08250N1-D	250	DC-8.5	N	Female	1.25	254*110*120
RFT12250N1-D	250	DC-12.4	N	Female	1.35	254*110*120
RFT18250N1-D	250	DC-18	N	Female	1.45	254*110*120

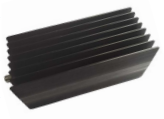

300 Watt, N, Up to 18GHz

Part Number	Avg Power (W)	Freq Range (GHz)	Connector	Gender	VSWR Max	Dimensions (mm)
RFT04300N2-D	300	DC-4	N	Male	1.2	305*110*120
RFT06300N2-D	300	DC-6	N	Male	1.25	305*110*120
RFT08300N2-D	300	DC-8.5	N	Male	1.25	305*110*120
RFT12300N2-D	300	DC-12.4	N	Male	1.35	305*110*120
RFT18300N2-D	300	DC-18	N	Male	1.45	305*110*120
RFT04300N1-D	300	DC-4	N	Female	1.2	305*110*120
RFT06300N1-D	300	DC-6	N	Female	1.25	305*110*120
RFT08300N1-D	300	DC-8.5	N	Female	1.25	305*110*120
RFT12300N1-D	300	DC-12.4	N	Female	1.35	305*110*120
RFT18300N1-D	300	DC-18	N	Female	1.45	305*110*120

500 Watt, N, Up to 18GHz

Part Number	Avg Power (W)	Freq Range (GHz)	Connector	Gender	VSWR Max	Dimensions (mm)
RFT04500N2-D	500	DC-4	N	Male	1.2	509*110*120
RFT06500N2-D	500	DC-6	N	Male	1.25	509*110*120
RFT08500N2-D	500	DC-8.5	N	Male	1.25	509*110*120
RFT12500N2-D	500	DC-12.4	N	Male	1.35	509*110*120
RFT04500N1-D	500	DC-4	N	Female	1.2	509*110*120
RFT06500N1-D	500	DC-6	N	Female	1.25	509*110*120
RFT08500N1-D	500	DC-8.5	N	Female	1.25	509*110*120
RFT12500N1-D	500	DC-12.4	N	Female	1.35	509*110*120
RFT18500N1-D	500	DC-18	N	Female	1.45	509*110*120

Low PIM Terminations

RF ONE has been designing low PIM Termination since 2014. Over the past years, we have developed cable terminations ranging from 170dBc (test grade) to 150dBc (production grade). Our low PIM terminations are available in 25W, 30W, 50W, 70W, 100W, 150W and 200W.

25 Watt

Part Number	Freq Range (GHz)	Avg Power (W)	VSWR Max	3rd PIM Min	Connector
RTL0425D1-D	380-4000	25	1.3	-160dBc	DIN 7/16 Female
RTL042543102-D	380-4000	25	1.3	-160dBc	4.3-10 Male
RTL042543101-D	380-4000	25	1.3	-160dBc	4.3-10 Female
RTL0425N2-D	380-4000	25	1.3	-160dBc	N Male
RTL0425N1-D	380-4000	25	1.3	-160dBc	N Female
RTL0425D1-D	380-4000	25	1.3	-160dBc	DIN 7/16 Female

30 Watt

Part Number	Freq Range (GHz)	Avg Power (W)	VSWR Max	3rd PIM Min	Connector
RTL0330D2	380-2700	30	1.25	-158dBc	DIN 7/16 Male

50 Watt

Part Number	Freq Range (GHz)	Avg Power (W)	VSWR Max	3rd PIM Min	Connector
RTL0350D2	380-2700	50	1.25	-158dBc	DIN 7/16 Male
RTL0350D1	380-2700	50	1.25	-158dBc	DIN 7/16 Female
RTL035043102	380-2700	50	1.25	-158dBc	4.3-10 Male
RTL035043101	380-2700	50	1.25	-158dBc	4.3-10 Female
RTL0350N2	380-2700	50	1.25	-158dBc	N Male
RTL0350N1	380-2700	50	1.25	-158dBc	N Female

RTL0450D1-D	380-4000	50	1.3	-160dBc	DIN 7/16 Female
RTL045043102-D	380-4000	50	1.3	-160dBc	4.3-10 Male
RTL045043101-D	380-4000	50	1.3	-160dBc	4.3-10 Female
RTL0450N2-D	380-4000	50	1.3	-160dBc	N Male
RTL0450N1-D	380-4000	50	1.3	-160dBc	N Female

70 Watt

Part Number	Freq Range (GHz)	Avg Power (W)	VSWR Max	3rd PIM Min	Connector
RTL0370N1	380-2700	70	1.25	-158dBc	N Female

100 Watt

Part Number	Freq Range (GHz)	Avg Power (W)	VSWR Max	3rd PIM Min	Connector
RTL04100N2	600-4000	100	1.30	-160dBc	N Male
RTL06100D1-D	698-2700	100	1.25	-168dBc	DIN 7/16 Female
RTL04100D1-D	380-4000	100	1.3	-160dBc	DIN 7/16 Female
RTL0410043102-D	380-4000	100	1.3	-160dBc	4.3-10 Male
RTL0410043101-D	380-4000	100	1.3	-160dBc	4.3-10 Female
RTL04100N2-D	380-4000	100	1.3	-160dBc	N Male
RTL04100N1-D	380-4000	100	1.3	-160dBc	N Female

150 Watt

Part Number	Freq Range (GHz)	Avg Power (W)	VSWR Max	3rd PIM Min	Connector
RTL04150N1-DA	400-6000	150	1.38	-160dBc	N Female

200 Watt

Part Number	Freq Range (GHz)	Avg Power (W)	VSWR Max	3rd PIM Min	Connector
RTL0420043101-DA	400-6000	200	1.38	-160dBc	4.3-10 Female
RTL0520043101-D	555-6000	200	1.3	-160dBc	4.3-10 Female
RTL0520043102-D	555-6000	200	1.3	-160dBc	4.3-10 Male
RTL05200D1-D	555-6000	200	1.3	-160dBc	DIN 7/16 Female
RTL05200D2-D	555-6000	200	1.3	-160dBc	DIN 7/16 Male

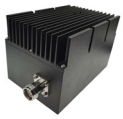

300 Watt

Part Number	Freq Range (GHz)	Avg Power (W)	VSWR Max	3rd PIM Min	Connector
RTL0430043101-D	400-6000	300	1.30	-160dBc	4.3-10 Female
RTL04300D1-D	400-6000	300	1.3	-160dBc	DIN 7/16 Female

Inner DC Blocks

- Wideband performance, 9KHz and up to 67GHz
- 50V till 250V options
- Excellent return loss, very low insertion loss
- Male/female, male/male and female/female available
- RoHS and REACH compliant

1.85mm, 10MHz-67GHz

Part Number	Freq Range (GHz)	IL Max (dB)	VSWR Max	Voltage Max V	Connector
DB6067A	0.01-67	0.9	1.5	60	1.85mm

Drawing(mm)

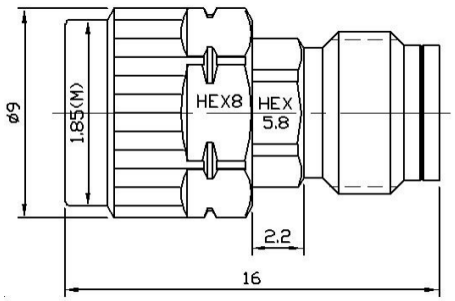

Typical Test Data

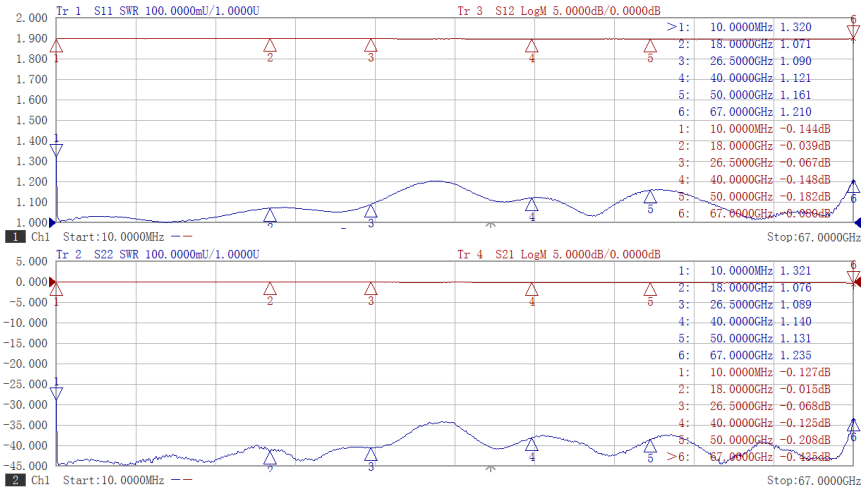

2.4mm, 10MHz-50GHz

Part Number	Freq Range (GHz)	IL Max (dB)	VSWR Max	Voltage Max V	Connector
DB6050A	0.01-50	0.6	1.35	60	2.4mm

Drawing(mm)

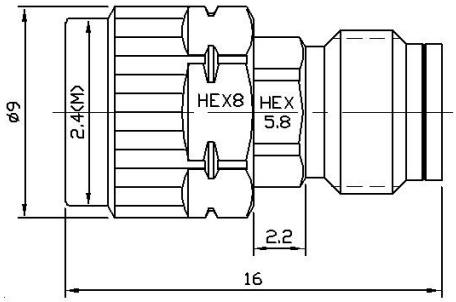

Typical Test Data

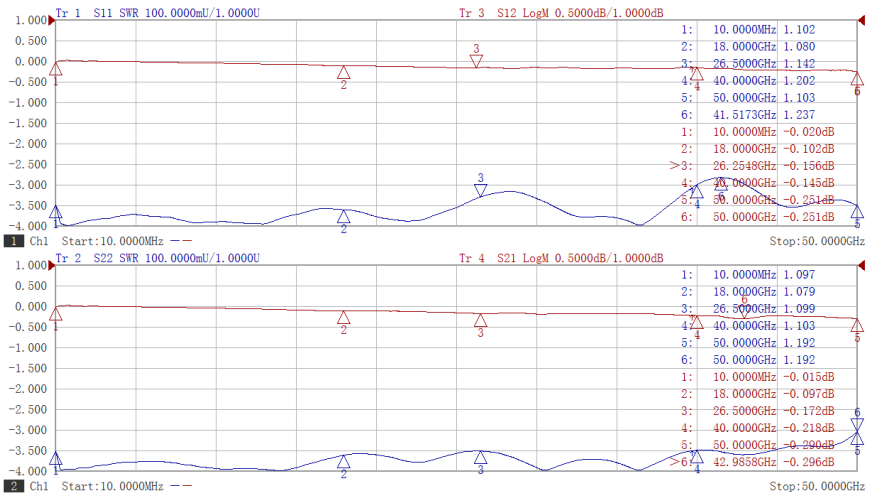

2.92mm, 10MHz-40GHz

Part Number	Freq Range (GHz)	IL Max (dB)	VSWR Max	Voltage Max V	Connector
DB6040A	0.01-40	0.5	1.35	60	2.92mm

Drawing(mm)

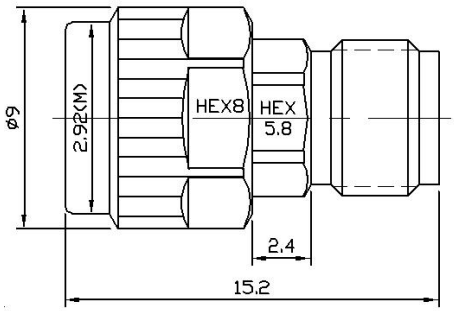

Typical Test Data

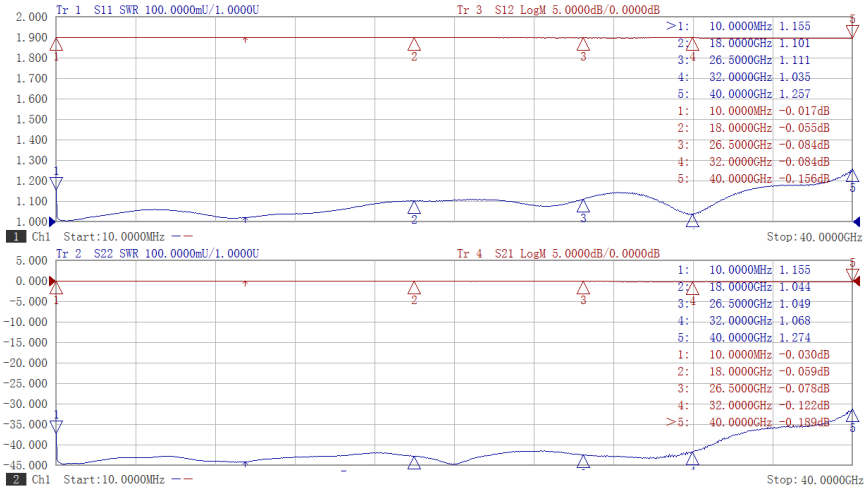

SMA, 9KHz-26.5GHz, 10MHz-26.5GHz

Part Number	Freq Range (GHz)	IL Max (dB)	VSWR Max	Voltage Max V	Connector
DB27S1A	9KHz-26.5GHz	1.0	1.55	50	SMA
DB27S2A	10MHz-26.5GHz	0.6	1.3	50	SMA
DB27S3A	10MHz-26.5GHz	0.6	1.3	100	SMA
DB27S4A	10MHz-26.5GHz	0.6	1.3	250	SMA

Drawing(mm)

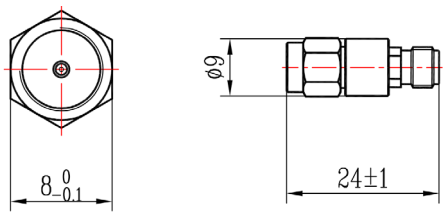

Typical Test Data

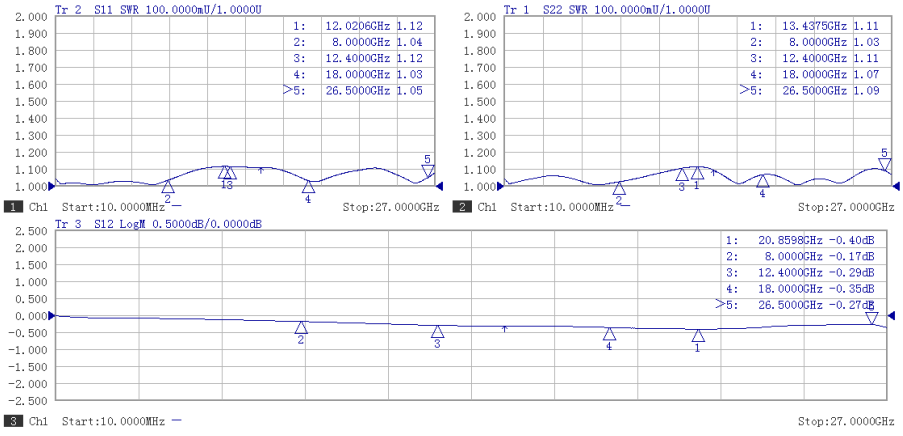

SMA, 9KHz-18GHz, 10MHz-18GHz

Part Number	Freq Range (GHz)	IL Max (dB)	VSWR Max	Voltage Max V	Connector
DB18S1A	9KHz-18GHz	0.9	1.3	50	SMA
DB18S2A	10MHz-18GHz	0.5	1.3	50	SMA
DB18S3A	10MHz-18GHz	0.5	1.3	100	SMA
DB18S4A	10MHz-18GHz	0.5	1.3	250	SMA

Typical Test Data

Drawing(mm)

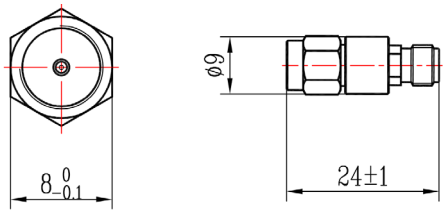

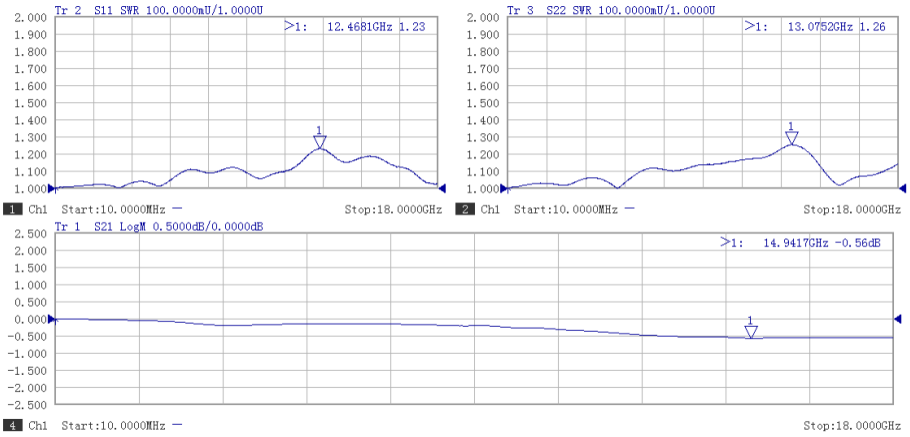

SMA, 10MHz-8GHz

Part Number	Freq Range (GHz)	IL Max (dB)	VSWR Max	Voltage Max V	Connector
DB08S5A	10MHz-8GHz	0.3	1.2	50	SMA
DB08S6A	10MHz-8GHz	0.3	1.2	100	SMA
DB08S7A	10MHz-8GHz	0.3	1.2	250	SMA

Typical Test Data

Drawing(mm)

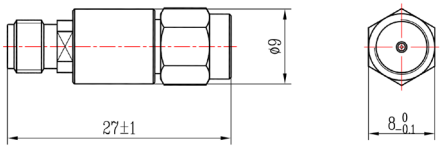

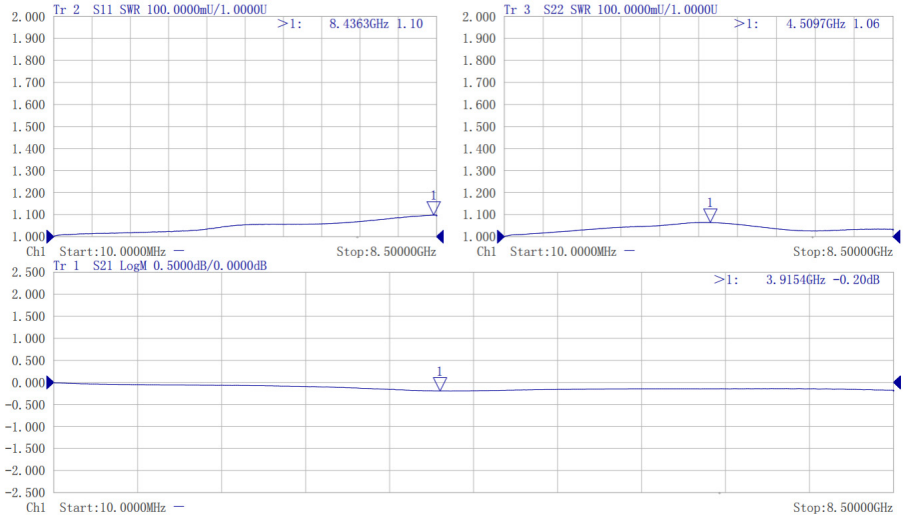

Type N, 9KHz-18GHz, 10MHz-18GHz

Part Number	Freq Range (GHz)	IL Max (dB)	VSWR Max	Voltage Max V	Connector
DB18N1A	9KHz-18GHz	0.9dB	1.3	50V	N
DB18N2A	10MHz-18GHz	0.6dB	1.3	50V	N
DB18N3A	10MHz-18GHz	0.6dB	1.3	100V	N
DB18N4A	10MHz-18GHz	0.6dB	1.3	250V	N

Drawing(mm)

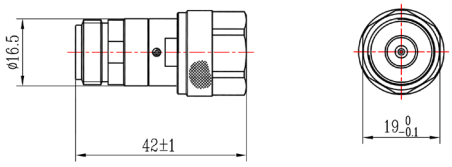

Typical Test Data

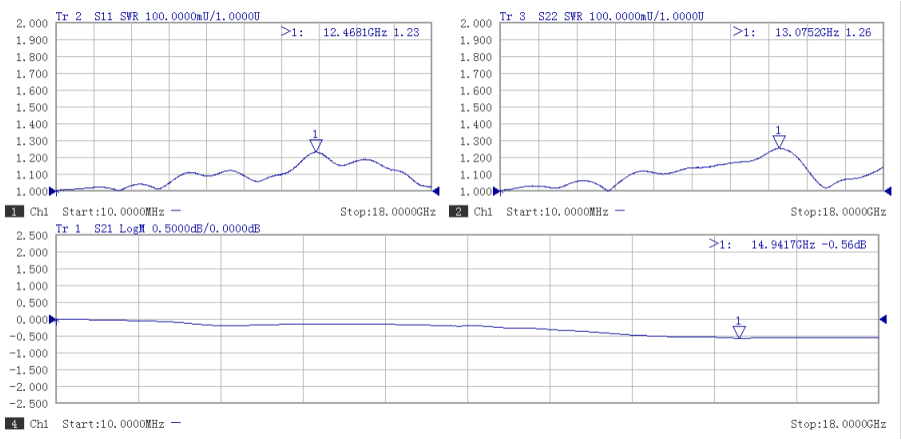

Type N, 10MHz-8GHz

Part Number	Freq Range (GHz)	IL Max (dB)	VSWR Max	Voltage Max V	Connector
DB08N5A	10MHz-8GHz	0.4dB	1.2	50V	N
DB08N6A	10MHz-8GHz	0.4dB	1.2	100V	N
DB08N7A	10MHz-8GHz	0.4dB	1.2	250V	N

Drawing(mm)

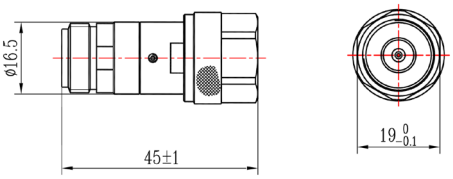

Typical Test Data

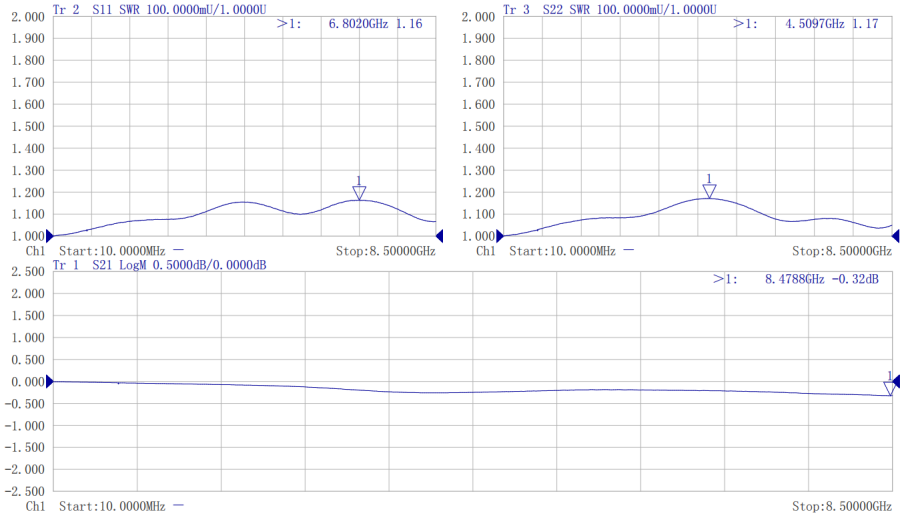

Coaxial Adapters

RF ONE offers a huge selection of high precision RF/Microwave and mmWave adapters from stock, including SMA, SSMA, SMP, BNC, Type-N, TNCA, 3.5mm, 2.92mm(K type), 2.4mm,1.85mm(V type), 1.0mm etc, in-series and between-series, available in flange, bulkhead types, right angle and straight body styles.

These adapters can be widely used in general purpose or precision test & measurement, allowing connection between series of connectors.

Features

- Up to 110 GHz, covering 1.0mm, 1.85mm, 2.4mm, 2.92mm, 3.5mm, SMA, SMP, SSMP, TNC, N type
- Straight and right angle styles, bulkhead and 4 hole flange mounting methods
- Built with ruggedized stainless steel body, 100% RF tested
- Unbeatable price & performance ratio
- From stock or in less than 1 week

Adapter Matrix

Series	1.0mm											
1.0mm	Y	1.85mm										
1.85mm	Y	Y	2.4mm									
2.4mm		Y	Y	SSMP								
SSMP			Y		2.92mm							
2.92mm		Y	Y	Y	Y	SMP						
SMP			Y		Y		SSMA					
SSMA			Y	Y	Y	Y	Y	3.5mm				
3.5mm		Y	Y		Y	Y	Y	Y	SMA(27G)			
SMA(27G)			Y		Y			Y	Y	SMA(18G)		
SMA(18G)		Y	Y	Y	Y	Y	Y	Y		Y	N Type	
N Type			Y		Y		Y	Y		Y	Y	TNC(A)
TNC(A)										Y	Y	Y

This matrix does not include all of RF ONE adapter lineup, for needs of other adapters, please contact us at sales@rfone.cn.

1.0mm Series, DC-110GHz

1.0mm to 1.0mm

A11001P

A11002P

A11003P

Part Number	Freq Range (GHz)	Connector 1	Connector 2	Style	VSWR Max
A11001P	110	1.0mm Female	1.0mm Female	Straight	1.35
A11002P	110	1.0mm Female	1.0mm Male	Straight	1.35
A11003P	110	1.0mm Male	1.0mm Male	Straight	1.35

1.85mm Series, DC-67GHz

1.85mm to 1.85mm

A6701P

A6702P

A6703P

A6501P-Y1

A6703B-RA

Part Number	Freq Range (GHz)	Connector 1	Connector 2	Style	VSWR Max
A6701B	67	1.85mm Female	1.85mm Female	Straight	1.3
A6702B	67	1.85mm Male	1.85mm Male	Straight	1.3
A6703B	67	1.85mm Female	1.85mm Male	Straight	1.3
A6501P-Y1	67	1.85mm Female	1.85mm Female	Bulkhead	1.25
A6701B-RA	50	1.85mm Female	1.85mm Female	Right Angle	1.35
A6702B-RA	50	1.85mm Male	1.85mm Male	Right Angle	1.35
A6703B-RA	50	1.85mm Female	1.85mm Male	Right Angle	1.35

1.85mm to 1.0mm

A6504P

A6505P

A6506P

A6507P

Part Number	Freq Range (GHz)	Connector 1	Connector 2	Style	VSWR Max
A6504P	67	1.85mm Female	1.0mm Female	Straight	1.25
A6505P	67	1.85mm Female	1.0mm Male	Straight	1.25
A6506P	67	1.85mm Male	1.0mm Female	Straight	1.25
A6507P	67	1.85mm Male	1.0mm Male	Straight	1.25

2.4mm Series, DC-50GHz

2.4mm to 2.4mm

A5001P

A5002P

A5003P

A5001B-F1

A5001P-Y1

A5003B-RA

Part Number	Freq Range (GHz)	Connector 1	Connector 2	Style	VSWR Max
A5001B	50	2.4mm Female	2.4mm Female	Straight	1.2
A5002B	50	2.4mm Male	2.4mm Male	Straight	1.2
A5003B	50	2.4mm Female	2.4mm Male	Straight	1.2
A5001B-F1	50	2.4mm Female	2.4mm Female	4 Hole Flange	1.2
A5001P-Y1	50	2.4mm Female	2.4mm Female	Bulkhead	1.2
A5001B-RA	50	2.4mm Female	2.4mm Female	Right Angle	1.35
A5002B-RA	50	2.4mm Male	2.4mm Male	Right Angle	1.35
A5003B-RA	50	2.4mm Female	2.4mm Male	Right Angle	1.35

2.4mm to 1.85mm

A5004B

A5005B

A5006B

A5007B

A5006B-RA

Part Number	Freq Range (GHz)	Connector 1	Connector 2	Style	VSWR Max
A5004B	50	2.4mm Male	1.85mm Male	Straight	1.2
A5005B	50	2.4mm Male	1.85mm Female	Straight	1.2
A5006B	50	2.4mm Female	1.85mm Male	Straight	1.2
A5007B	50	2.4mm Female	1.85mm Female	Straight	1.2
A5004B-RA	50	2.4mm Male	1.85mm Male	Right Angle	1.35
A5005B-RA	50	2.4mm Male	1.85mm Female	Right Angle	1.35
A5006B-RA	50	2.4mm Female	1.85mm Male	Right Angle	1.35
A5007B-RA	50	2.4mm Female	1.85mm Female	Right Angle	1.35

SSMP Series, DC-40GHz

SSMP to 2.4mm

A4028B

A4029B

A4030B

A4031B

Part Number	Freq Range (GHz)	Connector 1	Connector 2	Style	VSWR Max
A4028B	40	2.4mm Male	SSMP Male	Straight	1.3
A4029B	40	2.4mm Male	SSMP Female	Straight	1.3
A4030B	40	2.4mm Female	SSMP Male	Straight	1.3
A4031B	40	2.4mm Female	SSMP Female	Straight	1.3

2.92mm Series, DC-40GHz

2.92mm to 2.92mm

A4001B

A4002B

A4003B

A4001B-F1

A4001P-F1

A4001B-Y1

A4001P-Y1

A4003B-RA

Part Number	Freq Range (GHz)	Connector 1	Connector 2	Style	VSWR Max
A4001B	40	2.92mm Female	2.92mm Female	Straight	1.2
A4002B	40	2.92mm Male	2.92mm Male	Straight	1.2
A4003B	40	2.92mm Female	2.92mm Male	Straight	1.2
A4001B-F1	40	2.92mm Female	2.92mm Female	4 Hole Flange	1.2
A4001P-F1	40	2.92mm Male	2.92mm Female	4 Hole Flange	1.2
A4001B-Y1	40	2.92mm Female	2.92mm Female	Bulkhead	1.2
A4001P-Y1	40	2.92mm Male	2.92mm Female	Bulkhead	1.15
A4001B-RA	40	2.92mm Female	2.92mm Female	Right Angle	1.25
A4002B-RA	40	2.92mm Male	2.92mm Male	Right Angle	1.25
A4003B-RA	40	2.92mm Female	2.92mm Male	Right Angle	1.25

2.92mm to SSMP

A4024B

A4025B

A4026B

A4027B

Part Number	Freq Range (GHz)	Connector 1	Connector 2	Style	VSWR Max
A4024B	40	2.92mm Male	SSMP Male	Straight	1.3
A4025B	40	2.92mm Male	SSMP Female	Straight	1.3
A4026B	40	2.92mm Female	SSMP Male	Straight	1.3
A4027B	40	2.92mm Female	SSMP Female	Straight	1.3

2.92mm to 2.4mm

A4004B

A4005B

A4006B

A4007B

A4007P-F1

A4005B-RA

Part Number	Freq Range (GHz)	Connector 1	Connector 2	Style	VSWR Max
A4004B	40	2.92mm Female	2.4mm Female	Straight	1.2
A4005B	40	2.92mm Female	2.4mm Male	Straight	1.2
A4006B	40	2.92mm Male	2.4mm Male	Straight	1.2
A4007B	40	2.92mm Male	2.4mm Female	Straight	1.2
A4007P-F1	40	2.92mm Female	2.4mm Female	4 Hole Flange	1.2
A4004B-RA	40	2.92mm Female	2.4mm Female	Right Angle	1.25
A4005B-RA	40	2.92mm Female	2.4mm Male	Right Angle	1.25
A4006B-RA	40	2.92mm Male	2.4mm Male	Right Angle	1.25
A4007B-RA	40	2.92mm Male	2.4mm Female	Right Angle	1.25

2.92mm to 1.85mm

A4008B

A4009B

A4010B

A4011B

A4009B-RA

Part Number	Freq Range (GHz)	Connector 1	Connector 2	Style	VSWR Max
A4008B	40	2.92mm Male	1.85mm Male	Straight	1.2
A4009B	40	2.92mm Male	1.85mm Female	Straight	1.2
A4010B	40	2.92mm Female	1.85mm Female	Straight	1.2
A4011B	40	2.92mm Female	1.85mm Male	Straight	1.2
A4008B-RA	40	2.92mm Male	1.85mm Male	Right Angle	1.25
A4009B-RA	40	2.92mm Male	1.85mm Female	Right Angle	1.25
A4010B-RA	40	2.92mm Female	1.85mm Female	Right Angle	1.25
A4011B-RA	40	2.92mm Female	1.85mm Male	Right Angle	1.25

SMP Series, DC-40GHz

SMP to 2.92mm

A4012B

A4013B

A4014B

A4015B

Part Number	Freq Range (GHz)	Connector 1	Connector 2	Style	VSWR Max
A4012B	40	SMP Male	2.92mm Male	Straight	1.3
A4013B	40	SMP Female	2.92mm Male	Straight	1.3
A4014B	40	SMP Male	2.92mm Female	Straight	1.3
A4015B	40	SMP Female	2.92mm Female	Straight	1.3

SMP to 2.4mm

A4016B

A4017B

A4018B

A4019B

Part Number	Freq Range (GHz)	Connector 1	Connector 2	Style	VSWR Max
A4016B	40	SMP Male	2.4mm Male	Straight	1.3
A4017B	40	SMP Female	2.4mm Male	Straight	1.3
A4018B	40	SMP Male	2.4mm Female	Straight	1.3
A4019B	40	SMP Female	2.4mm Female	Straight	1.3

SSMA Series, DC-40GHz

SSMA to SSMA

A4032B

A4033B

A4034B

Part Number	Freq Range (GHz)	Connector 1	Connector 2	Style	VSWR Max
A4032B	40	SSMA Female	SSMA Female	Straight	1.2
A4033B	40	SSMA Male	SSMA Male	Straight	1.2
A4034B	40	SSMA Male	SSMA Female	Straight	1.2

SSMA to SMP

A4035B

A4036B

A4037B

A4038B

Part Number	Freq Range (GHz)	Connector 1	Connector 2	Style	VSWR Max
A4035B	40	SSMA Male	SMP Male	Straight	1.3
A4036B	40	SSMA Male	SMP Female	Straight	1.3
A4037B	40	SSMA Female	SMP Male	Straight	1.3
A4038B	40	SSMA Female	SMP Female	Straight	1.3

SSMA to 2.92mm

A4020B

A4021B

A4022B

A4023B

Part Number	Freq Range (GHz)	Connector 1	Connector 2	Style	VSWR Max
A4020B	40	SSMA Male	2.92mm Male	Straight	1.2
A4021B	40	SSMA Female	2.92mm Male	Straight	1.2
A4022B	40	SSMA Male	2.92mm Female	Straight	1.2
A4023B	40	SSMA Female	2.92mm Female	Straight	1.2

SSMA to SSMP

A4039B

A4040B

A4041B

A4042B

Part Number	Freq Range (GHz)	Connector 1	Connector 2	Style	VSWR Max
A4039B	40	SSMA Male	SSMP Male	Straight	1.25
A4040B	40	SSMA Male	SSMP Female	Straight	1.25
A4041B	40	SSMA Female	SSMP Male	Straight	1.25
A4042B	40	SSMA Female	SSMP Female	Straight	1.25

SSMA to 2.4mm

A4043B

A4044B

A4045B

A4046B

Part Number	Freq Range (GHz)	Connector 1	Connector 2	Style	VSWR Max
A4043B	40	SSMA Male	2.4mm Male	Straight	1.2
A4044B	40	SSMA Male	2.4mm Female	Straight	1.2
A4045B	40	SSMA Female	2.4mm Male	Straight	1.2
A4046B	40	SSMA Female	2.4mm Female	Straight	1.2

3.5mm Series, DC-34GHz

3.5mm to 3.5mm

A2701B

A2702B

A2703B

A2701B-F1

Part Number	Freq Range (GHz)	Connector 1	Connector 2	Style	VSWR Max
A2701B	34	3.5mm Female	3.5mm Female	Straight	1.2
A2702B	34	3.5mm Male	3.5mm Male	Straight	1.2
A2703B	34	3.5mm Female	3.5mm Male	Straight	1.2
A2701B-F1	34	3.5mm Female	3.5mm Female	4 Hole Flange	1.2

3.5mm to SSMA

A2720B

A2721B

A2722B

A2723B

Part Number	Freq Range (GHz)	Connector 1	Connector 2	Style	VSWR Max
A2720B	34	3.5mm Male	SSMA Male	Straight	1.2
A2721B	34	3.5mm Male	SSMA Female	Straight	1.2
A2722B	34	3.5mm Female	SSMA Male	Straight	1.2
A2723B	34	3.5mm Female	SSMA Female	Straight	1.2

3.5mm to SMP

A2712B

A2713B

A2714B

A2715B

Part Number	Freq Range (GHz)	Connector 1	Connector 2	Style	VSWR Max
A2712B	34	3.5mm Female	SMP Female	Straight	1.3
A2713B	34	3.5mm Female	SMP Male	Straight	1.3
A2714B	34	3.5mm Male	SMP Male	Straight	1.3
A2715B	34	3.5mm Male	SMP Female	Straight	1.3

3.5mm to 2.92mm

A2704B

A2705B

A2706B

A2707B

Part Number	Freq Range (GHz)	Connector 1	Connector 2	Style	VSWR Max
A2704B	34	3.5mm Female	2.92mm Female	Straight	1.2
A2705B	34	3.5mm Male	2.92mm Male	Straight	1.2
A2706B	34	3.5mm Female	2.92mm Male	Straight	1.2
A2707B	34	3.5mm Male	2.92mm Female	Straight	1.2

3.5mm to 2.4mm

A2708B

A2709B

A2710B

A2711B

Part Number	Freq Range (GHz)	Connector 1	Connector 2	Style	VSWR Max
A2708B	34	3.5mm Male	2.4mm Female	Straight	1.2
A2709B	34	3.5mm Male	2.4mm Male	Straight	1.2
A2710B	34	3.5mm Female	2.4mm Female	Straight	1.2
A2711B	34	3.5mm Female	2.4mm Male	Straight	1.2

3.5mm to 1.85mm

A2716B

A2717B

A2718B

A2719B

Part Number	Freq Range (GHz)	Connector 1	Connector 2	Style	VSWR Max
A2716B	34	3.5mm Male	1.85mm Male	Straight	1.2
A2717B	34	3.5mm Male	1.85mm Female	Straight	1.2
A2718B	34	3.5mm Female	1.85mm Male	Straight	1.2
A2719B	34	3.5mm Female	1.85mm Female	Straight	1.2

SMA Series, DC-27GHz

SMA to SMA

A2701P

A2702P

A2703P

A2701P-F1

A2702P-F

A2701P-Y1

A4001P-RA1

Part Number	Freq Range (GHz)	Connector 1	Connector 2	Style	VSWR Max
A2701P	27	SMA Female	SMA Female	Straight	1.15
A2702P	27	SMA Male	SMA Female	Straight	1.15
A2703P	27	SMA Male	SMA Male	Straight	1.15
A2701P-F1	27	SMA Female	SMA Female	4 Hole Flange	1.15
A2702P-F	27	SMA Male	SMA Female	4 Hole Flange	1.15
A2701P-Y1	27	SMA Female	SMA Female	Bulkhead	1.15
A2701P-RA1	27	SMA Female	SMA Female	Right Angle	1.25
A2702P-RA1	27	SMA Male	SMA Female	Right Angle	1.25
A2703P-RA1	27	SMA Male	SMA Male	Right Angle	1.25

SMA to 3.5mm

A2709P

A2710P

A2711P

A2712P

Part Number	Freq Range (GHz)	Connector 1	Connector 2	Style	VSWR Max
A2709P	27	SMA Female	3.5mm Female	Straight	1.15
A2710P	27	SMA Female	3.5mm Male	Straight	1.15
A2711P	27	SMA Male	3.5mm Female	Straight	1.15
A2712P	27	SMA Male	3.5mm Male	Straight	1.15

SMA to 2.92mm

A2713P

A2714P

A2715P

A2716P

Part Number	Freq Range (GHz)	Connector 1	Connector 2	Style	VSWR Max
A2713P	27	SMA Female	2.92mm Female	Straight	1.15
A2714P	27	SMA Female	2.92mm Male	Straight	1.15
A2715P	27	SMA Male	2.92mm Female	Straight	1.15
A2716P	27	SMA Male	2.92mm Male	Straight	1.15

SMA to 2.4mm

A2717P

A2718P

A2719P

A2720P

Part Number	Freq Range (GHz)	Connector 1	Connector 2	Style	VSWR Max
A2717P	27	SMA Female	2.4mm Female	Straight	1.15
A2718P	27	SMA Female	2.4mm Male	Straight	1.15
A2719P	27	SMA Male	2.4mm Female	Straight	1.15
A2720P	27	SMA Male	2.4mm Male	Straight	1.15

SMA Series, DC-18GHz

SMA to SMA

A1828B

A1829B

A1830B

Part Number	Freq Range (GHz)	Connector 1	Connector 2	Style	VSWR Max
A1828B	18	SMA Female	SMA Female	Straight	1.15
A1829B	18	SMA Male	SMA Male	Straight	1.15
A1830B	18	SMA Male	SMA Female	Straight	1.15

SMA to 3.5mm

A1843B

A1844B

A1845B

A1846B

Part Number	Freq Range (GHz)	Connector 1	Connector 2	Style	VSWR Max
A1843B	18	SMA Male	3.5mm Male	Straight	1.15
A1844B	18	SMA Male	3.5mm Female	Straight	1.15
A1845B	18	SMA Female	3.5mm Male	Straight	1.15
A1846B	18	SMA Female	3.5mm Female	Straight	1.15

SMA to SSMA

A1831B

A1832B

A1833B

A1834B

Part Number	Freq Range (GHz)	Connector 1	Connector 2	Style	VSWR Max
A1831B	18	SMA Male	SSMA Male	Straight	1.15
A1832B	18	SMA Male	SSMA Female	Straight	1.15
A1833B	18	SMA Female	SSMA Male	Straight	1.15
A1834B	18	SMA Female	SSMA Female	Straight	1.15

SMA to SMP

A1835B

A1836B

A1837B

A1838B

Part Number	Freq Range (GHz)	Connector 1	Connector 2	Style	VSWR Max
A1835B	18	SMA Male	SMP Male	Straight	1.25
A1836B	18	SMA Male	SMP Female	Straight	1.25
A1837B	18	SMA Female	SMP Male	Straight	1.25
A1838B	18	SMA Female	SMP Female	Straight	1.25

SMA to 2.92mm

A1847B

A1848B

A1849B

A1850B

Part Number	Freq Range (GHz)	Connector 1	Connector 2	Style	VSWR Max
A1847B	18	SMA Male	2.92mm Male	Straight	1.15
A1848B	18	SMA Male	2.92mm Female	Straight	1.15
A1849B	18	SMA Female	2.92mm Male	Straight	1.15
A1850B	18	SMA Female	2.92mm Female	Straight	1.15

SMA to SSMP

A1839B

A1840B

A1841B

A1842B

Part Number	Freq Range (GHz)	Connector 1	Connector 2	Style	VSWR Max
A1839B	18	SMA Male	SSMP Male	Straight	1.2
A1840B	18	SMA Male	SSMP Female	Straight	1.2
A1841B	18	SMA Female	SSMP Male	Straight	1.2
A1842B	18	SMA Female	SSMP Female	Straight	1.2

SMA to 2.4mm

A1851B

A1852B

A1853B

A1854B

Part Number	Freq Range (GHz)	Connector 1	Connector 2	Style	VSWR Max
A1851B	18	SMA Male	2.4mm Male	Straight	1.15
A1852B	18	SMA Male	2.4mm Female	Straight	1.15
A1853B	18	SMA Female	2.4mm Male	Straight	1.15
A1854B	18	SMA Female	2.4mm Female	Straight	1.15

SMA to 1.85mm

A1855B

A1856B

A1857B

A1858B

Part Number	Freq Range (GHz)	Connector 1	Connector 2	Style	VSWR Max
A1855B	18	SMA Male	1.85mm Male	Straight	1.15
A1856B	18	SMA Male	1.85mm Female	Straight	1.15
A1857B	18	SMA Female	1.85mm Male	Straight	1.15
A1858B	18	SMA Female	1.85mm Female	Straight	1.15

N Series, DC-18GHz

N to N

A1825B

A1826B

A1827B

Part Number	Freq Range (GHz)	Connector 1	Connector 2	Style	VSWR Max
A1825B	18	N Female	N Female	Straight	1.15
A1826B	18	N Female	N Male	Straight	1.15
A1827B	18	N Male	N Male	Straight	1.15

N to SMA

A1805B

A1806B

A1807B

A1808B

A1802P-F1

A1802P-Y1

Part Number	Freq Range (GHz)	Connector 1	Connector 2	Style	VSWR Max
A1805B	18	N Male	SMA Male	Straight	1.15
A1806B	18	N Male	SMA Female	Straight	1.15
A1807B	18	N Female	SMA Male	Straight	1.15
A1808B	18	N Female	SMA Female	Straight	1.15
A1802P-F1	18	N Female	SMA Female	4 Hole Flange	1.15
A1802P-Y1	18	N Female	SMA Female	Bulkhead	1.15

N to 3.5mm

A1813B

A1814B

A1815B

A1816B

Part Number	Freq Range (GHz)	Connector 1	Connector 2	Style	VSWR Max
A1813B	18	N Male	3.5mm Male	Straight	1.15
A1814B	18	N Male	3.5mm Female	Straight	1.15
A1815B	18	N Female	3.5mm Male	Straight	1.15
A1816B	18	N Female	3.5mm Female	Straight	1.15

N to SSMA

A1809B

A1810B

A1811B

A1812B

Part Number	Freq Range (GHz)	Connector 1	Connector 2	Style	VSWR Max
A1809B	18	N Male	SSMA Male	Straight	1.15
A1810B	18	N Male	SSMA Female	Straight	1.15
A1811B	18	N Female	SSMA Male	Straight	1.15
A1812B	18	N Female	SSMA Female	Straight	1.15

N to 2.92mm

A1817B

A1818B

A1819B

A1820B

Part Number	Freq Range (GHz)	Connector 1	Connector 2	Style	VSWR Max
A1817B	18	N Male	2.92mm Male	Straight	1.15
A1818B	18	N Male	2.92mm Female	Straight	1.15
A1819B	18	N Female	2.92mm Male	Straight	1.15
A1820B	18	N Female	2.92mm Female	Straight	1.15

N to 2.4mm

A1821B

A1822B

A1823B

A1824B

Part Number	Freq Range (GHz)	Connector 1	Connector 2	Style	VSWR Max
A1821B	18	N Male	2.4mm Male	Straight	1.15
A1822B	18	N Male	2.4mm Female	Straight	1.15
A1823B	18	N Female	2.4mm Female	Straight	1.15
A1824B	18	N Female	2.4mm Male	Straight	1.15

TNCA Series, DC-18GHz

TNCA to TNCA

A1806P

A1807P

A1808P

A1806P-F1

A1806P-Y1

Part Number	Freq Range (GHz)	Connector 1	Connector 2	Style	VSWR Max
A1806P	18	TNCA Female	TNCA Female	Straight	1.25
A1807P	18	TNCA Female	TNCA Male	Straight	1.25
A1808P	18	TNCA Male	TNCA Male	Straight	1.25
A1806P-F1	18	TNCA Female	TNCA Female	4 Hole Flange	1.25
A1806P-Y1	18	TNCA Female	TNCA Female	Bulkhead	1.25

TNCA to N

A1823P

A1824P

A1825P

A1826P

Part Number	Freq Range (GHz)	Connector 1	Connector 2	Style	VSWR Max
A1823P	18	TNCA Female	N Female	Straight	1.25
A1824P	18	TNCA Male	N Female	Straight	1.25
A1825P	18	TNCA Female	N Male	Straight	1.25
A1826P	18	TNCA Male	N Male	Straight	1.25

TNCA to SMA

A1827P

A1828P

A1829P

A1830P

A1830P

Part Number	Freq Range (GHz)	Connector 1	Connector 2	Style	VSWR Max
A1827P	18	TNCA Female	SMA Female	Straight	1.15
A1828P	18	TNCA Male	SMA Female	Straight	1.15
A1829P	18	TNCA Female	SMA Male	Straight	1.15
A1830P	18	TNCA Male	SMA Male	Straight	1.15
A1827P-F1	18	TNCA Female	SMA Female	4 Hole Flange	1.15

Waveguide to Coax Adapters

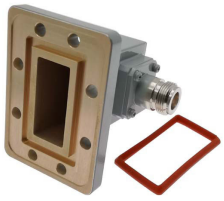

- Waveguide covering from WR10 to WR975
- Available in 1.0mm, 1.85mm, 2.4mm, 2.92mm and SMA, N, DIN 7/16 connectors
- Connectors are built with ruggedized stainless steel body
- Excellent VSWR, low insertion loss
- No MOQ, short delivery
- 100% RF Test

Waveguide to 1.0mm, 1.85mm, 2.4mm, 2.92mm, WR10 to WR42

Part Number	Waveguide Size	Coaxial	Freq Range (GHz)	VSWR Max	Flange Type	Body Style
AWR101	WR10	1.0mm	75-110	1.38	UG387/U	Right Angle
AWR121	WR12	1.0mm	60-90	1.38	UG387/U	Right Angle
AWR121EL	WR12	1.0mm	60-90	1.6	UG387/U	End-launch
AWR15185	WR15	1.85mm	50-67	1.6	UG385/U	Right Angle
AWR19185	WR19	1.85mm	40-60	1.6	UG-383/U	Right Angle
AWR2224	WR22	2.4mm	33-50	1.4	UG383/U	Right Angle
AWR28292	WR28	2.92mm	26.5-40	1.25	UBR320	Right Angle
AWR28292EL	WR28	2.92mm	26.5-40	1.2	UBR320	End-launch
AWR34292	WR34	2.92mm	21.7-33	1.2	UBR260	Right Angle
AWR34292EL	WR34	2.92mm	21.7-33	1.2	UBR260	End-launch
AWR34292A	WR34	2.92mm	21.7-33	1.2	UG1530/U	Right Angle
AWR42292	WR42	2.92mm	17.6-26.7	1.2	UBR220	Right Angle
AWR42292EL	WR42	2.92mm	17.6-26.7	1.2	UBR220	End-launch

* All our standard models are not pressure sealed. Grooved flanges are also available upon request.
* This list does not include all our wageguide to coax adapters, contact us at sales@rfone.cn for your specific needs.

AWR121EL

AWR19185

AWR51SMA

AWR75SMAEL

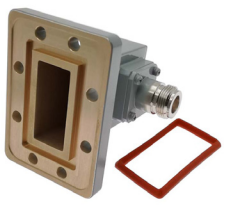
AWR137NG

Waveguide to SMA, N type, DIN 7/16, WR42 to WR975

Part Number	Waveguide Size	Coaxial	Freq Range (GHz)	VSWR Max	Flange Type	Body Style
AWR42SMA	WR42	SMA	17.6-26.7	1.2	UBR220	Right Angle
AWR51SMA	WR51	SMA	14.5-22	1.2	UBR180	Right Angle
AWR51SMAA	WR51	SMA	14.5-22	1.2	M3922/70-022	Right Angle
AWR62SMA	WR62	SMA	11.9-18	1.25	UBR140	Right Angle
AWR62N	WR62	N	11.9-18	1.2	UBR140	Right Angle
AWR62NEL	WR62	N	11.9-18	1.2	UBR140	End Launch
AWR75SMA	WR75	SMA	10-15	1.25	UBR120	Right Angle
AWR75SMAEL	WR75	SMA	9.84-15	1.2	UBR120	End Launch
AWR75N	WR75	N	9.84-15	1.25	UBR120	Right Angle
AWR75NM	WR75	N Male	9.84-15	1.25	UBR120	Right Angle
AWR90SMA	WR90	SMA	8.2-12.4	1.2	UBR100	Right Angle
AWR90SMAEL	WR90	SMA	8.2-12.4	1.2	UBR100	End Launch
AWR90N	WR90	N	8.2-12.5	1.2	UBR100	Right Angle
AWR112SMA	WR112	SMA	6.6-9.9	1.2	UBR84	Right Angle
AWR112N	WR112	N	6.6-9.9	1.2	UBR84	Right Angle
AWR137SMA	WR137	SMA	5.37-8.17	1.2	UDR70	Right Angle
AWR137N	WR137	N	5.37-8.17	1.2	UDR70	Right Angle
AWR137NM	WR137	N Male	5.38-8.17	1.25	UDR70	Right Angle
AWR187N	WR187	N	3.94-5.99	1.2	UDR48	Right Angle
AWR187SMA	WR187	SMA	3.94-5.99	1.2	UDR48	Right Angle
AWR187SMAM	WR187	SMA Male	3.94-5.99	1.2	UDR48	Right Angle
AWR229SMA	WR229	SMA	3.22-4.9	1.2	UDR40	Right Angle
AWR229N	WR229	N	3.22-4.9	1.2	UDR40	Right Angle
AWR284SMA	WR284	SMA	2.6-3.95	1.2	UDR32	Right Angle
AWR284N	WR284	N	2.6-3.95	1.2	UDR32	Right Angle
AWR340SMA	WR340	SMA	2.17-3.3	1.2	UDR26	Right Angle
AWR340N	WR340	N	2.17-3.3	1.2	UDR26	Right Angle
AWR340D	WR340	DIN 7/16	2.17-3.3	1.25	UDR26	Right Angle
AWR430SMA	WR430	SMA	1.72-2.61	1.2	UDR22	Right Angle
AWR430N	WR430	N	1.72-2.61	1.2	UDR22	Right Angle
AWR650SMA	WR650	SMA	1.13-1.73	1.2	UDR14	Right Angle
AWR650N	WR650	N	1.13-1.73	1.2	UDR14	Right Angle
AWR770SMA	WR770	SMA	0.96-1.46	1.2	UDR12	Right Angle
AWR770N	WR770	N	0.96-1.46	1.2	UDR12	Right Angle
AWR770D	WR770	DIN 7/16	0.96-1.46	1.2	UDR12	Right Angle
AWR975SMA	WR975	SMA	0.76-1.15	1.2	UDR9	Right Angle
AWR975N	WR975	N	0.76-1.15	1.2	UDR9	Right Angle
AWR975D	WR975	DIN 7/16	0.76-1.15	1.2	UDR9	Right Angle

* All our standard models are not pressure sealed. Grooved flanges are also available upon request.
* This list does not include all our waveguide to coax adapters, contact us at sales@rfone.cn for your specific needs.

Double Ridge Waveguide to 2.4mm, 2.92mm, SMA, N, WRD110 to WRD840

Part Number	Waveguide Size	Coaxial	Freq Range (GHz)	VSWR Max	Flange Type	Body Style
AWRD110SMA	WRD110	SMA Female	11-26.5	1.3	20	Right Angle
AWRD18024	WRD180	2.4mm Female	18-40	1.5	10	Right Angle
AWRD180292	WRD180	2.92mm Female	18-40	1.3	20	Right Angle
AWRD200N	WRD200	N Female	2-6	1.3	200	Right Angle
AWRD250N	WRD250	N Female	2.5-8	1.3	150	Right Angle
AWRD350N	WRD350	N Female	3.5-8.2	1.3	150	Right Angle
AWRD500SMA	WRD500	SMA Female	5-18	1.3	50	Right Angle
AWRD500N	WRD500	N Female	5-18	1.3	150	Right Angle
AWRD580SMA	WRD580	SMA Female	5.8-16	1.3	50	Right Angle
AWRD580N	WRD580	N Female	5.8-16	1.3	50	Right Angle
AWRD650S	WRD650	SMA Female	6-18	1.25	50	Right Angle
AWRD650N	WRD650	N Female	6-18	1.3	200	Right Angle
AWRD750N	WRD750	N Female	7.5-18	1.3	200	Right Angle
AWRD750S	WRD750	SMA Female	7.5-18	1.25	50	Right Angle
AWRD750NEL	WRD750	N Female	7.5-18	1.3	200	End-launch
AWRD840N	WRD840	N Female	0.8-2	1.3	200	Right Angle

* This list does not include all our double ridge waveguide to coax adapters, contact us at sales@rfone.cn for your specific needs.

AWRD200N

AWRD500N

AWRD580SMA

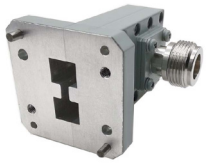

AWRD650N

AWRD750S

Low Power Waveguide Terminations

- Waveguide sizes from WR19-WR650, cover 1GHz to 50 GHz
- Iron carbonyl absorbing element
- Very low VSWR 1.03
- UG, CPR and custom flanges available
- Shorter lengths available

Low Power Waveguide Termination Loads, WR19 to WR650

Part Number	Waveguide Size	Freq Range (GHz)	VSWR Max	Avg Power Watts	Length mm	Flange Type
WT650A	WR650(R14)	1.13-1.73	1.03	25	500	IEC: UDR 14
WT510A	WR510(R18)	1.45-2.2	1.03	25	450	IEC: UDR 18
WT430A	WR430(R22)	1.72-2.61	1.03	15	280	IEC: UDR 22
WT340A	WR340(R26)	2.17-3.30	1.03	12	280	IEC: UDR 26
WT284A	WR284(R32)	2.60-3.95	1.03	10	280	IEC: UDR 32
WT229A	WR229(R40)	3.22-4.90	1.03	10	200	IEC: UDR 40
WT187A	WR187(R48)	3.94-5.99	1.03	8	150	IEC: UDR 48
WT159A	WR159(R58)	4.64-7.05	1.03	7	150	IEC: UDR 58
WT137A	WR137(R70)	5.38-8.17	1.03	6	150	IEC: UDR 70
WT112A	WR112(R84)	6.57-9.99	1.03	4	150	IEC: UDR 84
WT90A	WR90(R100)	8.20-12.5	1.03	4	120	IEC: UBR 100
WT75A	WR75(R120)	9.84-15.0	1.03	2	120	IEC: UBR 120
WT62A	WR62(R140)	11.9-18.0	1.03	1.5	120	IEC: UBR 140
WT51A	WR51(R180)	14.5-22.0	1.03	1	120	IEC: UBR 180
WT42A	WR42(R220)	17.6-26.7	1.03	0.5	100	IEC: UBR 220
WT34A	WR34(R260)	21.7-33.0	1.03	0.5	100	IEC: UBR 260
WT28A	WR28(R320)	26.3-40.0	1.03	0.5	100	IEC: UBR 320
WT22A	WR22(R400)	32.9-50.1	1.08	0.5	80	UG383/U
WT19A	WR19(R500)	39.2-59.6	1.08	0.4	80	UG383/U-Mod

* This list does not include all our low power terminations, contact us via sales@rfone.cn for your specific needs.

High Power Waveguide Terminations

- Low VSWR, 1.2 max
- High power handling
- Full waveguide frequency range
- Silicon carbide absorbing element
- High temperature resistant black painting

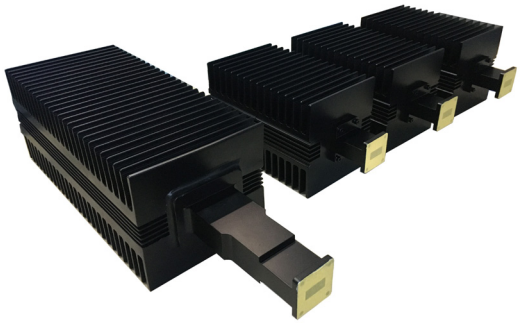

Medium Power

Part Number	Waveguide Size	Freq Range (GHz)	VSWR Max	Avg Power Watts	Flange Type
WT137A150	WR137(R70)	5.38-8.17	1.2	150	IEC: UDR 70
WT137A200	WR137(R70)	5.38-8.17	1.2	200	IEC: UDR 70
WT137A250	WR137(R70)	5.38-8.17	1.2	250	IEC: UDR 70
WT75A150	WR75(R120)	9.84-15.0	1.2	150	IEC: UBR 120
WT75A200	WR75(R120)	9.84-15.0	1.2	200	IEC: UBR 120
WT75A250	WR75(R120)	9.84-15.0	1.2	250	IEC: UBR 120
WT42A100	WR42(R220)	17.6-26.7	1.2	100	IEC: UBR 220
WT28A100	WR28(R320)	26.3-40.0	1.2	100	IEC: UBR 320

High Power

Part Number	Waveguide Size	Freq Range (GHz)	VSWR Max	Avg Power Watts	Flange Type
WT284A2500	WR284(R32)	2.60-3.95	1.2	2500	IEC: UDR 32
WT229A2500	WR229(R40)	3.22-4.90	1.2	2500	IEC: UDR 40
WT187A2500	WR187(R48)	3.94-5.99	1.2	2500	IEC: UDR 48
WT159A2500	WR159(R58)	4.64-7.05	1.2	2500	IEC: UDR 58
WT137A2500	WR137(R70)	5.38-8.17	1.2	2500	IEC: UDR 70
WT112A2500	WR112(R84)	6.57-9.99	1.2	2500	IEC: UDR 84
WT90A2500	WR90(R100)	8.20-12.5	1.15	2500	IEC: UBR 100
WT75A2500	WR75(R120)	9.84-15.0	1.15	2500	IEC: UBR 120
WT62A2500	WR62(R140)	11.9-18.0	1.15	2500	IEC: UBR 140
WT51A2500	WR51(R180)	14.5-22.0	1.2	2500	IEC: UBR 180
WT42A2500	WR42(R220)	17.6-26.7	1.15	2500	IEC: UBR 220
WT34A2500	WR34(R260)	21.7-33.0	1.15	2500	IEC: UBR 260
WT28A2500	WR28(R320)	26.3-40.0	1.15	2500	IEC: UBR 320
WT22A1500	WR22(R400)	32.9-50.1	1.2	1500	UG383/U
WT19A1500	WR19(R500)	39.2-59.6	1.2	1500	UG383/U-Mod

* Pressurization are available upon request.
* The list does not include all of our medium and high power waveguide terminations, contact us at sales@rfone.cn for your specific needs.

Wilkinson Power Dividers

RF ONE offers a range of Wilkinson power dividers with broad bandwidths and narrow bandwidths. Available in output ports of 2-way, 3-way, 4-way, 6-way, 8-way,12-way,16-way and interfaces of BNC, SMA, N type, 2.92mm, 2.4mm etc.

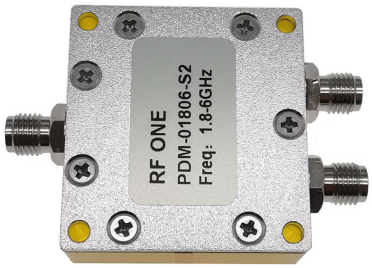

2 Way Wilkinson Power Dividers

Part Number	Freq Range	Insertion Loss	Input VSWR	Output VSWR	Isolation	Amplitude Balance	Phase Balance	Input Power	Connector
	GHz	dB, Max	Max	Max	dB, Min	±dB	±Deg	Watts, Max	
PDM-000101-B2	0.01-1	1.0	1.3	1.3	18	0.3	3	1	BNC Female
PDM-000101-N2	0.01-1	1.0	1.3	1.3	18	0.3	3	1	N Female
PDM-000101-S2	0.01-1	1.0	1.25	1.25	20	0.3	3	1	SMA Female
PDM-00103-S2	0.1-3	2.5	1.3	1.2	18	0.3	4	30	SMA Female
PDM-0038046-S2	0.38-4.6	1.0	1.25	1.2	20	0.2	3	30	SMA Female
PDM-003806-N2	0.38-6	1.4	1.3	1.2	20	0.2	3	30	N Female
PDM-003806-S2	0.38-6	1.2	1.25	1.2	20	0.2	3	30	SMA Female
PDM-003808-S2	0.38-8	1.4	1.25	1.2	20	0.3	3	30	SMA Female
PDM-00503-N2	0.5-3	1.0	1.25	1.2	20	0.2	3	30	N Female
PDM-00503-S2	0.5-3	0.6	1.25	1.2	20	0.2	2	30	SMA Female
PDM-00506-N2	0.5-6	1.2	1.25	1.2	20	0.2	3	30	N Female
PDM-00506-S2	0.5-6	1.0	1.4	1.2	18	0.2	2	30	SMA Female
PDM-00506-S2A	0.5-6	1.2	1.25	1.2	20	0.2	2	30	SMA Female
PDM-00508-N2	0.5-8	1.8	1.25	1.25	20	0.2	3	30	SMA Female
PDM-00508-S2	0.5-8	1.5	1.25	1.2	20	0.2	3	30	SMA Female
PDM-00510-S2	0.5-10	1.8	1.3	1.25	18	0.3	3	20	SMA Female
PDM-00518-S2	0.5-18	1.0	1.5	1.5	16	0.3	4	30	SMA Female
PDM-005265-S2	0.5-26.5	2.4	1.6	1.6	16	0.4	4	20	SMA Female
PDM-00612-S4	0.6-12	1.0	1.4	1.3	20	0.3	4	20	SMA Female
PDM-0069027-S2	0.69-2.7	0.5	1.25	1.2	20	0.2	2	30	SMA Female

2 Way Wilkinson Power Dividers

Part Number	Freq Range	Insertion Loss	Input VSWR	Output VSWR	Isolation	Amplitude Balance	Phase Balance	Input Power	Connector
	GHz	dB, Max	Max	Max	dB, Min	±dB	±Deg	Watts, Max	
PDM-00698027-N2	0.698-2.7	0.4	1.2	1.15	22	0.2	2	30	N Female
PDM-00698038-N2	0.698-3.8	0.8	1.25	1.2	20	0.2	3	50	N Female
PDM-00698038-S2	0.698-3.8	0.8	1.25	1.2	20	0.2	3	50	SMA Female
PDM-0106-S2	1-6	0.6	1.2	1.2	20	0.2	3	20	SMA Female
PDM-0108-S2	1-8	0.8	1.25	1.2	20	0.2	3	20	SMA Female
PDM-0118-S2A	1-18	1.2	1.4	1.3	18	0.3	3	20	SMA Female
PDM-01265-S2	1-26.5	1.5	1.8	1.5	16	0.4	5	20	SMA Female
PDM-01265-K2	1-26.5	1.5	1.8	1.5	16	0.4	5	20	2.92mm Female
PDM-0140-K2	1-40	1.8	1.8	1.6	16	0.4	5	20	2.92mm Female
PDM-01806-S2	1.8-6	0.6	1.25	1.2	20	0.2	2	30	SMA Female
PDM-0204-S2	2-4	0.5	1.25	1.2	20	0.2	3	30	SMA Female
PDM-0206-N2	2-6	0.6	1.25	1.2	20	0.2	3	30	N Female
PDM-0206-S2	2-6	0.5	1.25	1.2	20	0.2	3	30	SMA Female
PDM-0208-S2A	2-8	0.6	1.25	1.2	20	0.2	3	30	SMA Female
PDM-0212-S2	2-12	0.8	1.35	1.25	18	0.3	3	20	SMA Female
PDM-0218-N2	2-18	1.5	1.5	1.5	17	0.3	4	20	N Female
PDM-0218-S2	2-18	1.0	1.35	1.3	18	0.3	4	20	SMA Female
PDM-02265-S2	2-26.5	1.2	1.5	1.5	17	0.4	4	20	SMA Female
PDM-02265-K2	2-26.5	1.5	1.6	1.5	16	0.4	5	20	2.92mm Female
PDM-0240-K2	2-40	1.6	1.6	1.6	18	0.4	4	20	2.92mm Female
PDM-0408-S2	4-8	0.5	1.25	1.2	20	0.2	3	30	SMA Female
PDM-0412-S2	4-12	0.8	1.25	1.2	18	0.2	3	20	SMA Female
PDM-0414-S2	4-14	1.0	1.35	1.3	18	0.3	4	20	SMA Female
PDM-0416-S2	4-16	0.8	1.35	1.25	18	0.2	3	20	SMA Female
PDM-0440-K2	4-40	1.5	1.5	1.5	17	0.4	4	20	2.92mm Female
PDM-0618-S2	6-18	0.8	1.3	1.3	18	0.3	3	20	SMA Female
PDM-06265-S2	6-26.5	0.6	1.6	1.5	16	0.3	3	20	SMA Female
PDM-0640-K2	6-40	1.2	1.6	1.5	16	0.4	5	20	2.92mm Female
PDM-0812-S2	8-12	0.5	1.25	1.2	20	0.2	3	20	SMA Female
PDM-1020-S2	10-20	1.2	1.4	1.4	18	0.3	3	20	SMA Female
PDM-1028-K2	10-28	0.8	1.5	1.5	16	0.4	4	20	2.92mm Female
PDM-1035-K2	10-35	1.0	1.5	1.5	16	0.4	5	20	2.92mm Female
PDM-13515-S2	13.5-15	0.5	1.25	1.2	20	0.2	3	20	SMA Female
PDM-14531-K2	14.5-31	1.0	1.5	1.5	16	0.4	4	20	2.92mm Female
PDM-1632-K2	16-32	1.0	1.5	1.5	16	0.4	5	20	2.92mm Female
PDM-18265-S2	18-26.5	0.6	1.5	1.5	16	0.3	3	20	SMA Female
PDM-1831-K2	18-31	0.8	1.5	1.5	18	0.4	4	20	2.92mm Female
PDM-1840-K2	18-40	1.0	1.5	1.5	16	0.4	5	20	2.92mm Female
PDM-1850-V2	18-50	1.9	1.8	1.8	14	0.8	8	20	2.4mm Female
PDM-2040-K2	20-40	1.0	1.5	1.5	16	0.4	5	20	2.92mm Female
PDM-2228-K2	22-28	0.6	1.5	1.5	18	0.4	5	20	2.92mm Female
PDM-2440-K2	24-40	1.0	1.5	1.5	16	0.4	5	20	2.92mm Female

2 Way Wilkinson Power Dividers

Part Number	Freq Range	Insertion Loss	Input VSWR	Output VSWR	Isolation	Amplitude Balance	Phase Balance	Input Power	Connector
	GHz	dB, Max	Max	Max	dB, Min	±dB	±Deg	Watts, Max	
PDM-26540-K2	26.5-40	1.0	1.5	1.5	16	0.4	4	20	2.92mm Female
PDM-2628-K2	26-28	0.6	1.4	1.4	20	0.2	3	20	2.92mm Female
PDM-2731-K2	27-31	0.6	1.5	1.5	16	0.4	4	20	2.92mm Female
PDM-2752-V2	27-52	1.2	1.7	1.7	15	0.8	6	20	2.4mm Female
PDM-285325-K2	28.5-32.5	1.0	1.5	1.5	18	0.4	5	20	2.92mm Female
PDM-305325-K2	30.5-32.5	0.7	1.5	1.5	18	0.3	4	20	2.92mm Female
PDM-3240-K2	32-40	1.0	1.5	1.5	16	0.4	4	20	2.92mm Female
PDM-4346-V2	43-46	1.6	1.6	1.6	16	0.3	3	20	2.4mm Female

* Splitting loss for 2-way Wilkison power divider is 3.0 dB.
* Custom and optimized designs are available.

3 Way Wilkinson Power Dividers

Part Number	Freq Range	Insertion Loss	Input VSWR	Output VSWR	Isolation	Amplitude Balance	Phase Balance	Input Power	Connector
	GHz	dB, Max	Max	Max	dB, Min	±dB	±Deg	Watts, Max	
PDM-000101-S3	0.01-1	1.7	1.7	1.4	18	0.4	6	1	SMA Female
PDM-003806-S3	0.38-6	2.8	1.6	1.5	18	0.9	8	20	SMA Female
PDM-00506-N3	0.5-6	2.8	1.5	1.4	18	0.8	8	20	N Female
PDM-00506-S3	0.5-6	2.6	1.4	1.4	20	0.8	8	20	SMA Female
PDM-00508-S3	0.5-8	2.2	1.5	1.4	17	1.0	10	20	SMA Female
PDM-00512-S3	0.5-12	2.6	2.0	1.5	15	0.8	8	20	SMA Female
PDM-00698038-S3	0.698-3.8	1.2	1.25	1.2	20	0.6	6	50	SMA Female
PDM-0108-S3	1-8	1.5	1.35	1.25	18	0.8	8	20	SMA Female
PDM-0206-N3	2-6	0.8	1.25	1.2	20	0.5	5	30	N Female
PDM-0206-S3	2-6	0.7	1.25	1.2	20	0.5	5	20	SMA Female
PDM-0208-S3	2-8	1.0	1.3	1.25	18	0.5	5	20	SMA Female
PDM-0218-S3	2-18	1.5	1.5	1.5	18	0.6	6	20	SMA Female
PDM-0618-S3	6-18	1.2	1.5	1.5	18	0.6	6	20	SMA Female
PDM-0812-S3	8-12	1.0	1.4	1.4	18	0.5	5	20	SMA Female
PDM-2021-S3	20-21	0.8	1.35	1.35	18	1.2	4	20	SMA Female

* Splitting loss for 3-way Wilkison power divider is 4.8 dB.
* Custom and optimized designs are available.

4 Way Wilkinson Power Dividers

Part Number	Freq Range	Insertion Loss	Input VSWR	Output VSWR	Isolation	Amplitude Balance	Phase Balance	Input Power	Connector
	GHz	dB, Max	Max	Max	dB, Min	±dB	±Deg	Watts, Max	
PDM-000101-S4	0.01-1	1.6	1.25	1.25	18	0.4	4	1	SMA Female
PDM-0038046-S4	0.38-4.6	1.5	1.3	1.2	18	0.3	4	30	SMA Female
PDM-003806-S4	0.38-6	1.8	1.25	1.2	18	0.2	4	30	SMA Female
PDM-003808-S4	0.38-8	2.0	1.25	1.22	20	0.3	4	30	SMA Female
PDM-00503-S4	0.5-3	0.7	1.23	1.2	20	0.2	3	30	SMA Female
PDM-00506-N4	0.5-6	2.0	1.3	1.2	18	0.3	4	30	N Female
PDM-00506-S4	0.5-6	1.8	1.25	1.2	20	0.3	4	30	SMA Female
PDM-00506-S4A	0.5-6	1.6	1.25	1.2	20	0.3	4	30	SMA Female
PDM-00508-S4	0.5-8	2.0	1.3	1.2	18	0.3	4	20	SMA Female
PDM-00518-S4	0.5-18	2.5	2.0	1.5	15	0.8	8	30	SMA Female
PDM-005265-S4	0.5-26.5	3.0	1.5	1.5	14	0.5	6	20	SMA Female
PDM-006084-S4	0.6-8.4	2.2	1.35	1.25	18	0.3	4	20	SMA Female
PDM-0069027-S4	0.69-2.7	0.8	1.25	1.2	18	0.3	3	30	SMA Female
PDM-00698038-N4	0.698-3.8	1.6	1.3	1.2	24	0.3	4	30	N Female
PDM-00698038-S4	0.698-3.8	1.4	1.25	1.2	20	0.2	3	50	SMA Female
PDM-0106-S4	1-6	1.0	1.3	1.2	20	0.3	3	20	SMA Female
PDM-0108-S4	1-8	1.4	1.3	1.2	20	0.3	3	20	SMA Female
PDM-0118-S4	1-18	2.5	1.55	1.2	16	0.4	5	20	SMA Female
PDM-01265-S4	1-26.5	3.0	1.5	1.5	16	0.5	6	20	SMA Female
PDM-0132-K4	1-32	2.6	1.7	1.5	16	0.5	6	20	2.92mm Female
PDM-0140-K4	1-40	3.5	1.8	1.7	16	0.5	8	20	2.92mm Female
PDM-0204-S4	2-4	0.6	1.25	1.2	20	0.3	3	30	SMA Female
PDM-0206-N4	2-6	0.8	1.25	1.2	20	0.3	3	30	N Female
PDM-0206-S4	2-6	0.8	1.25	1.2	20	0.3	3	30	SMA Female
PDM-0208-N4	2-8	1.2	1.4	1.3	18	0.3	4	30	N Female
PDM-0208-S4A	2-8	1.0	1.35	1.25	18	0.3	4	30	SMA Female
PDM-0218-N4	2-18	2.2	1.6	1.5	17	0.4	6	20	N Female
PDM-0218-S4	2-18	2.0	1.5	1.4	17	0.4	6	20	SMA Female
PDM-0240-K4	2-40	3.0	2.1	1.6	15	0.5	10	20	2.92mm Female
PDM-0408-S4	4-8	1.0	1.35	1.25	18	0.3	4	30	SMA Female
PDM-0412-S4	4-12	1.2	1.4	1.3	18	0.2	4	20	SMA Female
PDM-0416-S4	4-16	1.5	1.4	1.3	18	0.3	5	20	SMA Female
PDM-0618-S4	6-18	1.0	1.4	1.4	18	0.3	5	20	SMA Female
PDM-0640-K4	6-40	2.0	2.0	1.6	15	0.5	8	20	2.92mm Female
PDM-075085-S4	7.5-8.5	0.8	1.3	1.2	18	0.3	3	20	SMA Female
PDM-0812-S4	8-12	1.0	1.25	1.2	18	0.4	4	20	SMA Female
PDM-1218-S2	12-18	1.0	1.4	1.3	18	0.3	5	20	SMA Female
PDM-18265-S4	18-26.5	1.0	1.5	1.5	16	0.4	5	20	SMA Female
PDM-1827-K4	18-27	1.0	1.5	1.5	16	0.4	5	20	2.92mm Female
PDM-1831-K4	18-31	1.0	1.5	1.5	18	0.4	6	20	2.92mm Female
PDM-1840-K4	18-40	1.6	1.5	1.5	16	0.4	5	20	2.92mm Female
PDM-2628-K4	26-28	1.0	1.4	1.4	20	0.2	5	20	2.92mm Female

4 Way Wilkinson Power Dividers

Part Number	Freq Range	Insertion Loss	Input VSWR	Output VSWR	Isolation	Amplitude Balance	Phase Balance	Input Power	Connector
	GHz	dB, Max	Max	Max	dB, Min	±dB	±Deg	Watts, Max	
PDM-2731-K4	27-31	1.0	1.5	1.5	16	0.4	5	20	2.92mm Female
PDM-305325-K4	30.5-32.5	1.4	1.5	1.5	16	0.4	4	20	2.92mm Female

* Splitting loss for 4-way Wilkison power divider is 6.0 dB.
* Custom and optimized designs are available.

6 Way Wilkinson Power Dividers

Part Number	Freq Range	Insertion Loss	Input VSWR	Output VSWR	Isolation	Amplitude Balance	Phase Balance	Input Power	Connector
	GHz	dB, Max	Max	Max	dB, Min	±dB	±Deg	Watts, Max	
PDM-00506-S6	0.5-6	3.0	1.5	1.3	18	0.8	8	20	SMA Female
PDM-00508-S6	0.5-8	3.5	1.55	1.4	17	1.0	10	20	SMA Female
PDM-0106-S6	1-6	1.8	1.4	1.3	18	0.8	8	20	SMA Female
PDM-0108-S6	1-8	2.0	1.4	1.3	18	0.8	6	20	SMA Female
PDM-0206-S6	2-6	1.0	1.35	1.25	20	0.5	5	30	SMA Female
PDM-0208-S6	2-8	1.2	1.35	1.25	20	0.5	5	30	SMA Female
PDM-0218-N6	2-18	3.0	1.7	1.6	18	0.6	6	20	N Female
PDM-0218-S6	2-18	2.6	1.5	1.5	16	0.6	8	20	SMA Female
PDM-1416-S6	14-16	1.4	1.7	1.5	17	0.8	8	30	SMA Female
PDM-2126-S6	21-26	3.0	1.5	1.5	16	0.8	8	20	SMA Female

* Splitting loss for 6-way Wilkison power divider is 7.8 dB.
* Custom and optimized designs are available.

8 Way Wilkinson Power Dividers

Part Number	Freq Range	Insertion Loss	Input VSWR	Output VSWR	Isolation	Amplitude Balance	Phase Balance	Input Power	Connector
	GHz	dB, Max	Max	Max	dB, Min	±dB	±Deg	Watts, Max	
PDM-00503-S8	0.5-3	1.0	1.25	1.2	20	0.3	4	30	SMA Female
PDM-00506-S8	0.5-6	2.8	1.4	1.3	18	0.4	5	30	SMA Female
PDM-00506-S8A	0.5-6	2.8	1.25	1.2	20	0.3	4	30	SMA Female
PDM-00506-S8-80	0.5-6	3.0	1.6	1.3	18	0.3	8	80	SMA Female
PDM-00508-S8	0.5-8	3.0	1.5	1.4	18	0.4	5	20	SMA Female
PDM-00518-S8	0.5-18	6.0	2	1.6	14	0.8	10	20	SMA Female
PDM-0069027-S8	0.69-2.7	1.0	1.25	1.2	20	0.3	4	30	SMA Female
PDM-00698027-N8	0.698-2.7	1.8	1.3	1.2	20	0.3	4	30	N Female
PDM-0112-S8	1-12	3.2	1.6	1.3	18	0.4	6	20	SMA Female
PDM-0118-S8	1-18	4.0	1.8	1.6	17	0.5	10	20	SMA Female
PDM-0204-S8	2-4	1.0	1.3	1.2	20	0.3	4	30	SMA Female
PDM-0208-N8	2-8	2.0	1.4	1.3	18	0.3	4	30	N Female
PDM-0208-S8	2-8	1.5	1.35	1.25	18	0.4	5	30	SMA Female
PDM-0218-S8	2-18	3.0	1.6	1.5	16	0.5	10	20	SMA Female
PDM-0408-S8	4-8	0.8	1.25	1.2	20	0.3	3	30	SMA Female
PDM-0412-S8	4-12	1.5	1.4	1.3	18	0.2	4	20	SMA Female
PDM-0416-S8	4-16	2.8	1.6	1.5	16	0.5	10	20	SMA Female
PDM-0618-S8	6-18	2.8	1.5	1.3	16	0.4	5	20	SMA Female
PDM-0812-S8	8-12	1.4	1.4	1.3	18	0.4	5	20	SMA Female
PDM-1040-K8	10-40	3.2	1.7	1.6	16	0.5	8	20	2.92mm Female
PDM-1218-S8	12-18	1.6	1.5	1.3	18	0.3	6	20	SMA Female
PDM-1640-K8	16-40	3.2	1.8	1.6	15	0.6	8	20	2.92mm Female
PDM-18265-K8	18-26.5	1.6	1.6	1.5	16	0.5	8	20	2.92mm Female
PDM-1840-K8	18-40	3.2	1.7	1.6	16	0.5	8	20	2.92mm Female
PDM-255265-K8	25.5-26.5	1.6	1.5	1.5	18	0.5	8	20	2.92mm Female
PDM-2731-K8	27-31	1.6	1.5	1.5	18	0.5	8	20	2.92mm Female

* Splitting loss for 6-way Wilkison power divider is 9.0 dB.
* Custom and optimized designs are available.

12 Way Wilkinson Power Dividers

Part Number	Freq Range	Insertion Loss	Input VSWR	Output VSWR	Isolation	Amplitude Balance	Phase Balance	Input Power	Connector
	GHz	dB, Max	Max	Max	dB, Min	±dB	±Deg	Watts, Max	
PDM-00506-S12	0.5-6	5.0	1.5	1.3	18	1.0	12	20	SMA Female
PDM-00508-S12	0.5-8	5.0	1.6	1.4	16	1.2	12	20	SMA Female
PDM-0208-S12	2-8	1.6	1.45	1.25	18	0.6	6	30	SMA Female
PDM-0408-S16	4-8	2.0	1.5	1.3	18	0.4	5	30	SMA Female
PDM-0618-S12	6-18	2.0	1.8	1.6	16	0.8	8	20	SMA Female
PDM-0812-S12	8-12	1.5	1.7	1.5	16	0.6	8	20	SMA Female

* Splitting loss for 12-way Wilkison power divider is 10.8 dB.
* Custom and optimized designs are available.

16 Way Wilkinson Power Dividers

Part Number	Freq Range	Insertion Loss	Input VSWR	Output VSWR	Isolation	Amplitude Balance	Phase Balance	Input Power	Connector
	GHz	dB, Max	Max	Max	dB, Min	±dB	±Deg	Watts, Max	
PDM-00506-N16	0.5-6	4.8	1.5	1.3	18	0.5	8	30	N Female
PDM-00506-S16	0.5-6	4.8	1.4	1.3	20	0.5	8	30	SMA Female
PDM-00508-S16	0.5-8	4.5	1.5	1.3	18	0.4	8	20	SMA Female
PDM-0069027-S16	0.69-2.7	1.5	1.3	1.2	20	0.3	5	30	SMA Female
PDM-0206-S16	2-6	1.6	1.4	1.25	18	0.3	5	30	SMA Female
PDM-0208-S16	2-8	2.8	1.5	1.3	18	0.4	6	30	SMA Female
PDM-04518-S16	4.5-18	2.2	1.6	1.5	17	0.6	6	20	SMA Female
PDM-0618-S16	6-18	1.8	1.6	1.5	17	0.6	6	20	SMA Female
PDM-0812-S16	8-12	1.6	1.3	1.3	18	0.4	5	20	SMA Female
PDM-1218-S16	12-18	2.2	1.5	1.3	16	0.3	8	20	SMA Female

* Splitting loss for 16-way Wilkison power divider is 12.0 dB.
* Custom and optimized designs are available.

Resistive Power Dividers

Resistive power dividers have the benefits of compactness in size and wideband operation starting from DC, but with the disadvantages of poor isolation, lower power rates and higher insertion loss. RF ONE resistive power dividers offer a wide frequency range of operation DC-67 Ghz. A variety of connector configurations is available.

DC-50GHz

DC-40GHz

DC-6GHz

Part Number	No. of Ways	Freq Range	Insertion Loss	Input VSWR	Output VSWR	Amplitude Balance	Phase Balance	Input Power	Connector
		GHz	dB, Max	Max	Max	±dB	±Deg	Watts, Max	
PDR-06-N2	2	DC-6	1	1.2	1.2	-	-	1	N Female
PDR-06-S2	2	DC-6	0.6	1.2	1.2	-	-	1	SMA Female
PDR-18-S2	2	DC-18	1.5	1.6	1.6	0.8	8	0.5	SMA Female
PDR-18-N2B	2	DC-18	1.5	1.4	1.4	0.4	5	1	N Type
PDR-27-K2	2	DC-27	1.5	1.5	2.5	0.5	4	0.5	2.92mm Female
PDR-34-352A	2	DC-34	0.6	1.3	1.3	0.4	4	5	3.5mm Female
PDR-40-K2	2	DC-40	1.5	1.5	2.5	0.5	4	0.5	2.92mm Female
PDR-40-K2A	2	DC-40	0.5	1.38	1.38	0.5	5	5	2.92mm Female
PDR-50-242	2	DC-50	2	1.5	2.5	0.7	7	1	2.4mm Female
PDR-67-V2	2	DC-67	2.5	1.8	2.5	0.8	8	1	1.85mm Female
PDR-06-S3	3	DC-6	0.8	1.2	1.2	-	-	1	SMA Female
PDR-06-N3	3	DC-6	1.2	1.2	1.2	-	-	1	N Female
PDR-06-S4	4	DC-6	1.2	1.25	1.25	-	-	1	SMA Female
PDR-06-S6	6	DC-6	1.5	1.2	1.2	-	-	1	SMA Female
PDR-06-S8R	8	DC-6	1.5	1.2	1.2	-	-	1	SMA Female
PDR-06-S8	8	DC-6	1.5	1.3	1.3	-	-	1	SMA Female

Note:
Splitting loss for 2-way resistive divider is 6.0 dB
Splitting loss for 3-way resistive divider is 9.5 dB
Splitting loss for 4-way resistive divider is 12.0 dB
Splitting loss for 6-way resistive divider is16.0 dB
Splitting loss for 8-way resistive divider is 18.0 dB

Custom and optimized designs are available.

End Launch Connectors

- Available in 2.92 mm (40 GHz), 2.4 mm (50 GHz), 1.85 mm (67 GHz), both jack and plug
- Launches to single layer microstrip or multilayer with grounded coplanar
- Field replaceable, requiring no solder for reusability
- Super small and low profile design
- From stock or in one week delivery
- Very low VSWR

Female

Part Number	Connector	Freq Range (GHz)	*VSWR Max	Pin diameter (mm/Inch)	Body Width (Inch)	**Max PCB Thickness (mm)
EL292F-1	2.92mm	DC-40	1.25	0.254/0.01	0.5(Standard)	2.5
EL292F-2	2.92mm	DC-40	1.25	0.18/0.007	0.5(Standard)	2.5
EL292F-3	2.92mm	DC-40	1.25	0.18/0.007	0.35(Narrow)	3
EL24F-1	2.4mm	DC-50	1.3	0.254/0.01	0.5(Standard)	2.5
EL24F-2	2.4mm	DC-50	1.3	0.18/0.007	0.5(Standard)	2.5
EL24F-3	2.4mm	DC-50	1.3	0.18/0.007	0.35(Narrow)	3
EL185F-1	1.85mm	DC-67	1.35	0.18/0.007	0.5(Standard)	2.5
EL185F-2	1.85mm	DC-67	1.35	0.18/0.007	0.35(Narrow)	3

Male

Part Number	Connector	Freq Range (GHz)	*VSWR Max	Pin diameter (mm/Inch)	Body Width (Inch)	**Max PCB Thickness (mm)
EL292M-1	2.92mm	DC-40	1.25	0.254/0.01	0.5(Standard)	2.5
EL292M-2	2.92mm	DC-40	1.25	0.18/0.007	0.5(Standard)	2.5
EL292M-3	2.92mm	DC-40	1.25	0.18/0.007	0.35(Narrow)	3
EL24M-1	2.4mm	DC-50	1.3	0.254/0.01	0.5(Standard)	2.5
EL24M-2	2.4mm	DC-50	1.3	0.18/0.007	0.5(Standard)	2.5
EL24M-3	2.4mm	DC-50	1.3	0.18/0.007	0.35(Narrow)	3
EL185M-1	1.85mm	DC-67	1.35	0.18/0.007	0.5(Standard)	2.5
EL185M-2	1.85mm	DC-67	1.35	0.18/0.007	0.35(Narrow)	3

* Actual VSWR is larely dependent on circuit board design. For optimal performance, it is suggested using Electromagnetic Simulation tools to model the connector and circuit launch geometry.
** Max PCB thickness is based on using our standard screws. Thicker PCB is also applicable by changing to longer screws.

Drawing

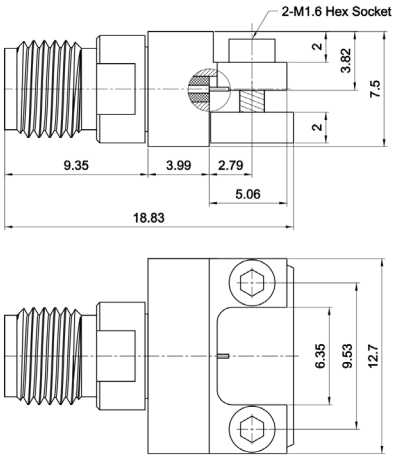

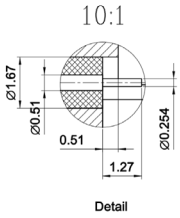

EL292F-1

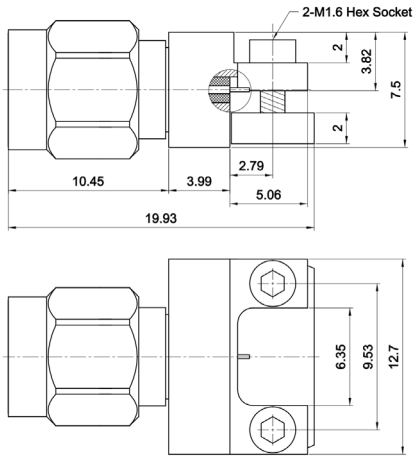

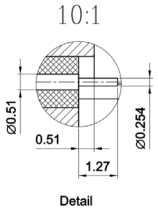

EL292M-1

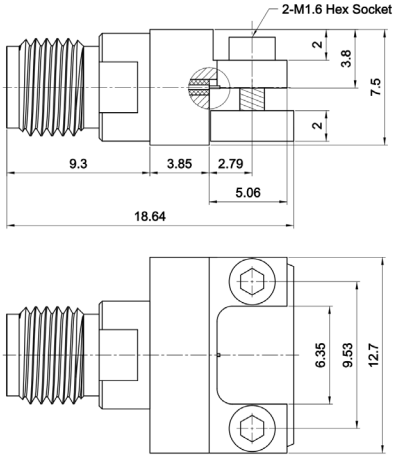

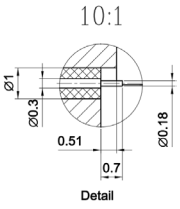

EL292F-2

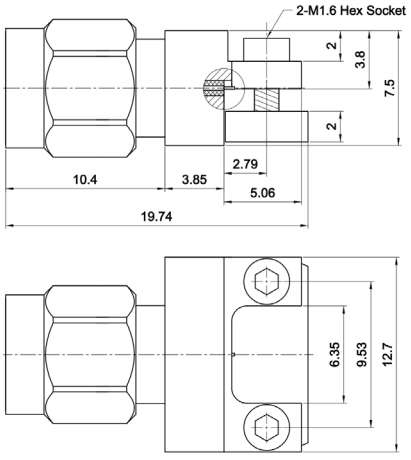

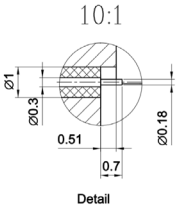

EL292M-2

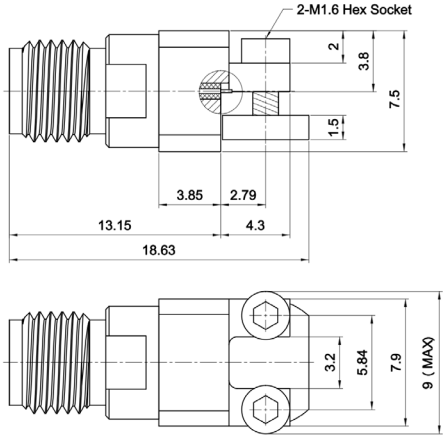

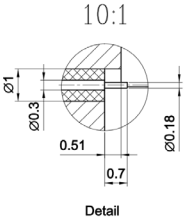

EL292F-3

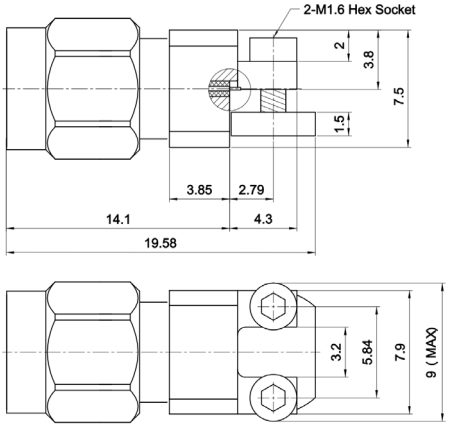

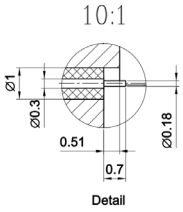

EL292M-3

Drawing

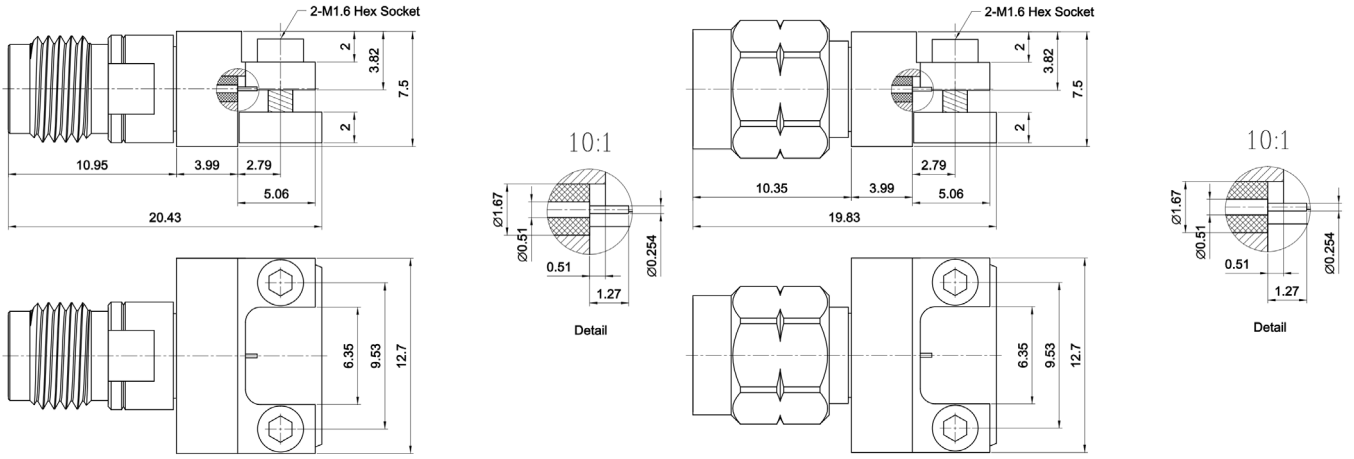

EL24F-1 EL24M-1

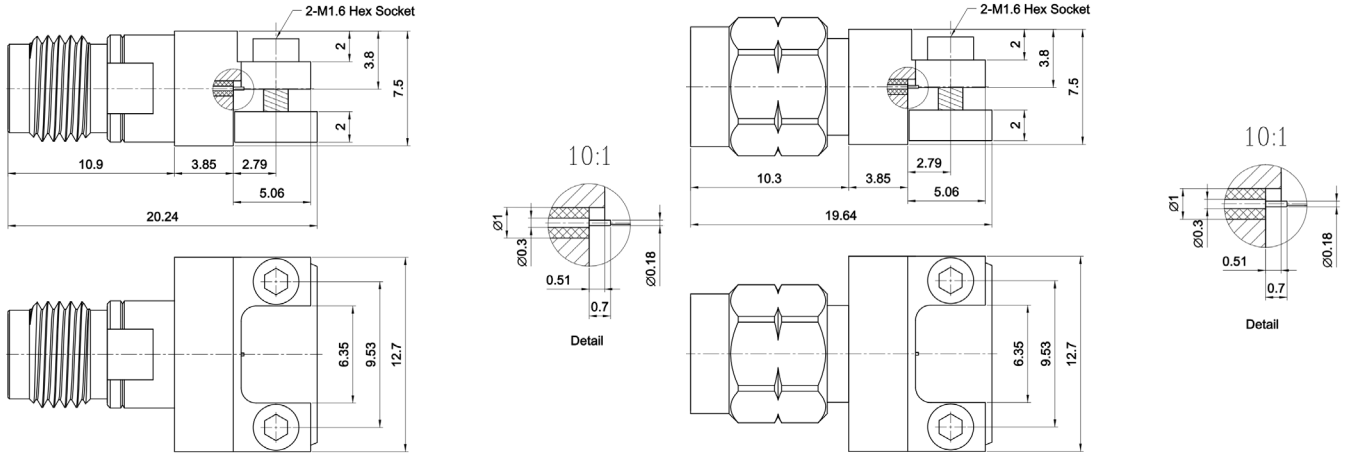

EL24F-2 EL24M-2

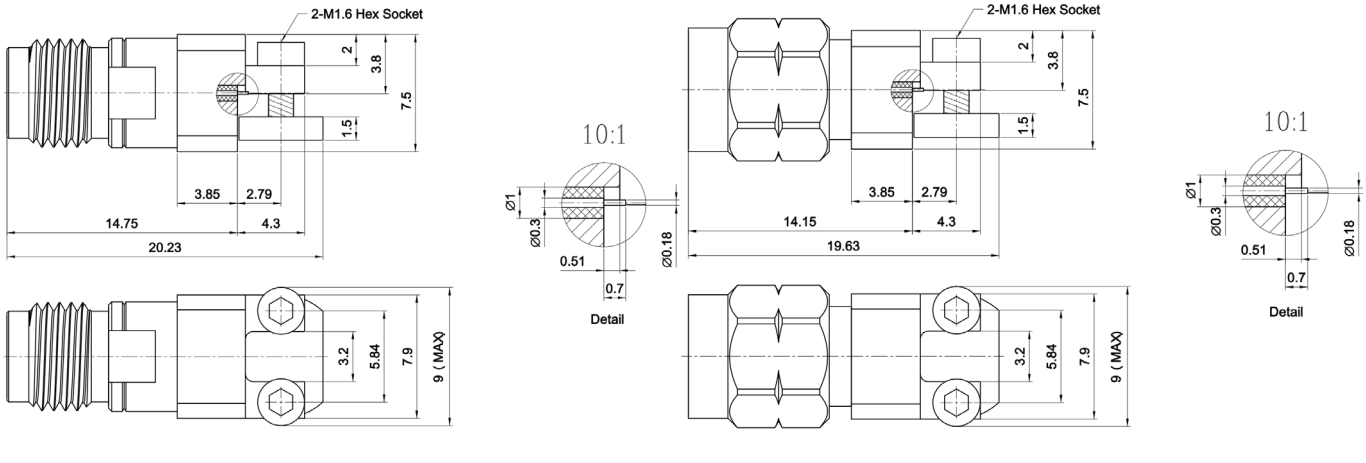

EL24F-3 EL24M-3

Drawing

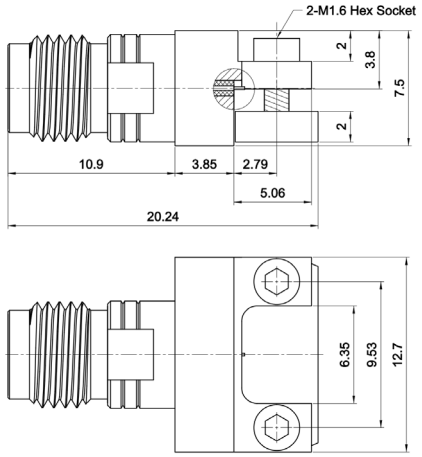

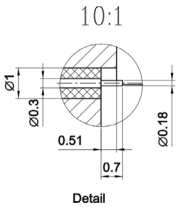

EL185F-1

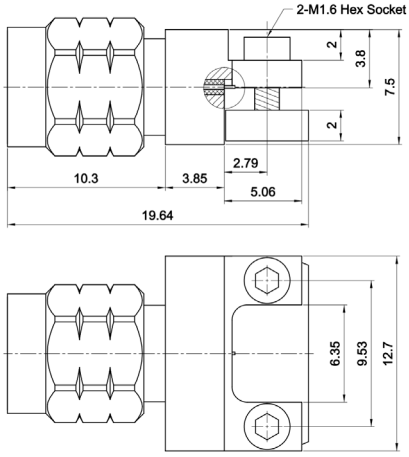

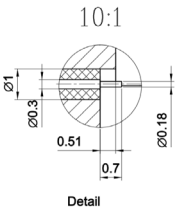

EL185M-1

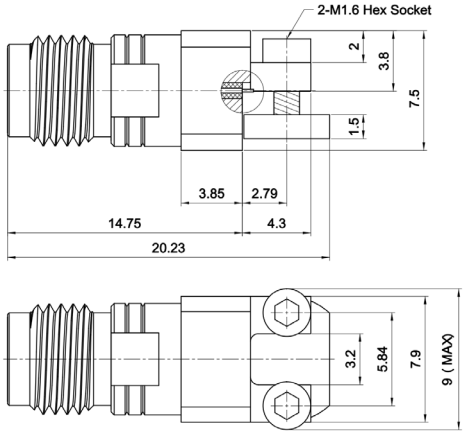

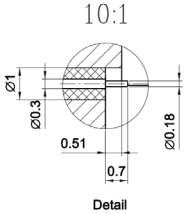

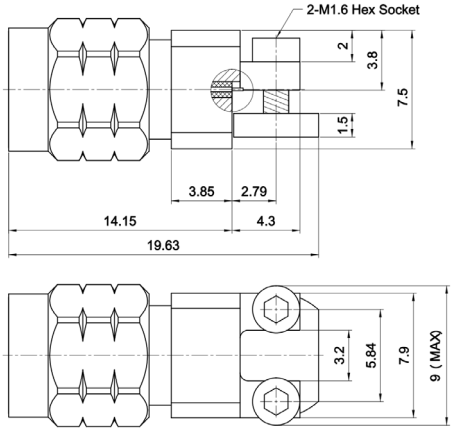

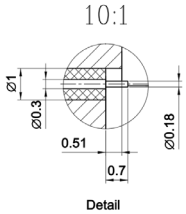

EL185F-2

EL185M-2

RF Torque Wrenches

RF torque wrenches are used to consistently and accurately tighten connectors. Proper mating is essential for optimal RF performance. RF ONE offers a broad range of preset torque wrenches in either click type or break-over type, designed for connectors of 1.85mm, 2.4mm, 2.92mm, 3.5mm, SMA, TNC, N type, 4.3-10, 4.1-9.5, DIN 7/16 etc.

Click type: the torque wrench using a ball detent and spring style clutch mechanism.
Breakover type: the torque wrench breaking over once the preset torque value is reached.

Features

- Tight torque value tolerance(±4%)
- Can be used in clockwise and counter-clockwise directions
- Wide selection covering almost all industry standard connectors
- Customized design available
- Highly competitive price, No MOQ

1.85mm/2.4mm/2.92mm/3.5mm/Stainless steel SMA, Breakover, 8mm Opening

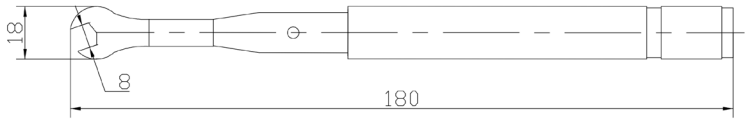

TW-0808-PB	
Wrench Type	Breakover
Torque Value	8 in-lbs (0.9N·m)

1.85mm/2.4mm/2.92mm/3.5mm/Stainless steel SMA, Preset Click, 8mm Opening

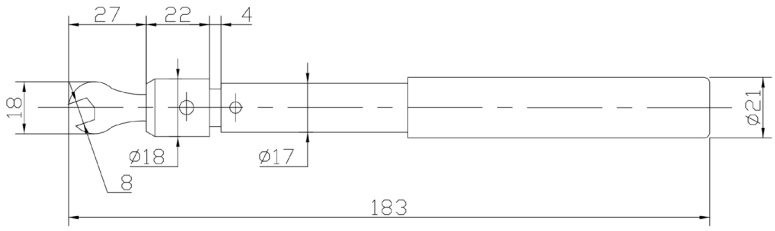

TW-0808-PDC	
Wrench Type	Preset Click
Torque Value	8 in-lbs (0.9N·m)

Brass SMA, Preset Click, 8mm Opening

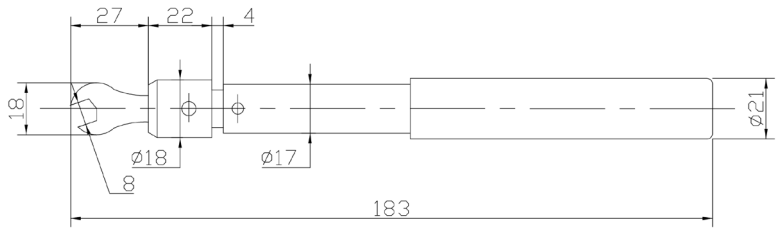

TW-0804-PDC	
Wrench Type	Preset Click
Torque Value	4 in-lbs (0.45N·m)

4.1-9.5, Preset Click, 22mm Opening

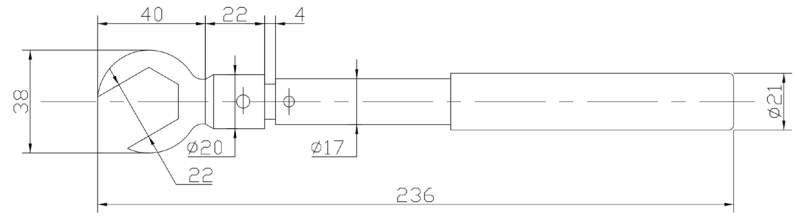

TW-2289-PDC	
Wrench Type	Preset Click
Torque Value	88.5 in-lbs (10N·m)

4.3-10, Preset Click, 22mm Opening

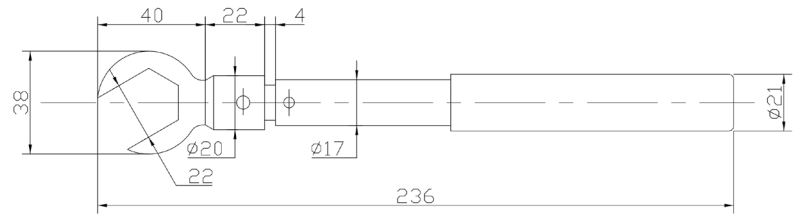

TW-2244-PDC	
Wrench Type	Preset Click
Torque Value	44.25 in-lbs (5N·m)

DIN 7/16, Preset Click, 32mm Opening

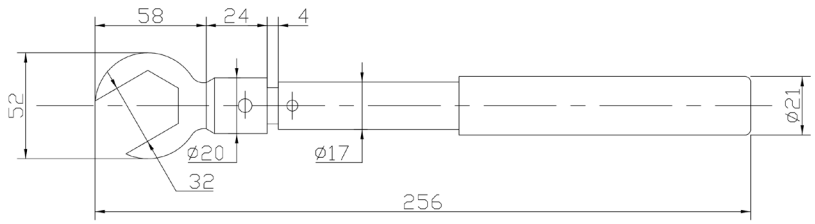

TW-32221-PDC	
Wrench Type	Preset Click
Torque Value	221 in-lbs (25N·m)

Stainless steel N Type, Preset Click, 20mm Opening

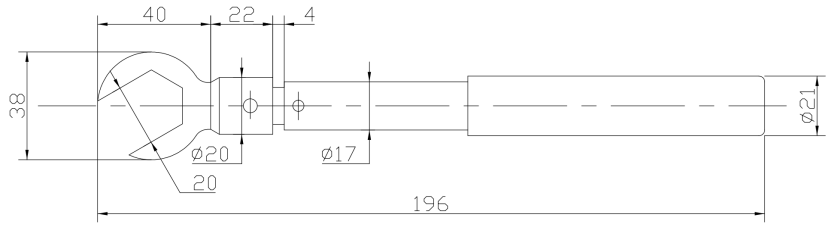

TW-2012-PDC	
Wrench Type	Preset Click
Torque Value	12 in-lbs (1.36N·m)

Stainless steel N Type, Preset Click, 19mm Opening

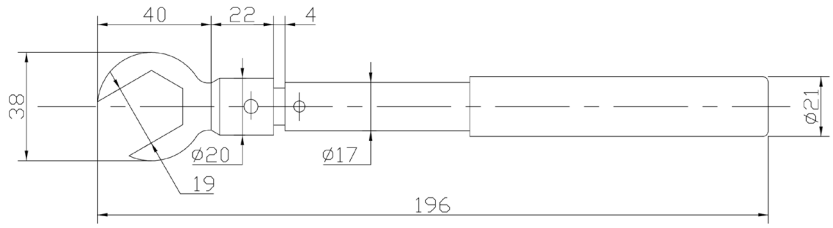

TW-1912-PDC	
Wrench Type	Preset Click
Torque Value	12 in-lbs (1.36N·m)

Brass N Type, Preset Click, 21mm Opening

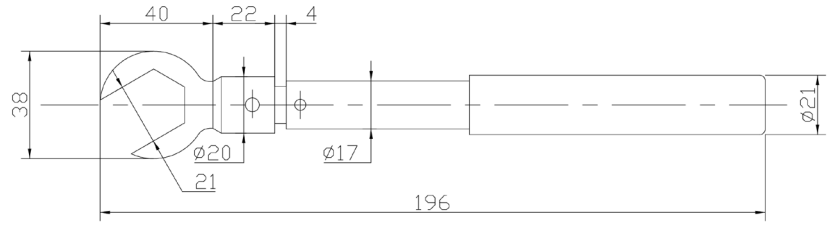

TW-2108-PDC	
Wrench Type	Preset Click
Torque Value	8 in-lbs (0.9N·m)

Catalog Notes

This catalog is designed to provide a general product overview, detailed data sheets can be viewed and downloaded from our website at www.rfone.cn

Most of RF ONE products are RoHS compliant and meet the requirements defined under Directive 2011/65/EU of the European Parliament, or ROHS compliant under exemption.RoHS test reports can be downloaded https://www.rfone.cn/Compliance/list.html

For more and new RF ONE Products, please visit our website or contact us at sales@rfone.cn. Below are some of more products available.

- RF Couplers
- RF Filters
- Cable Assemblies
- Production grade RF adapters
- Bias Tees
- Isolators and Circulators
- Waveguide attenuators, terminations, couplers

RF ONE Electronics

Suite 401, Bldg 1, Mingliang Technology Park, Zhuguang North Rd 88, Nanshan, Shenzhen, China, 518055

86-755-86705630 86-755-27757880

sales@rfone.cn www.rfone.cn www.rfone.com.cn